AC Motor(IK/RK)

IK motor is suitable for application of operating continuously.
RK motor is suitable for application of reversing its direction repeatedly (30 mins rated time limited).

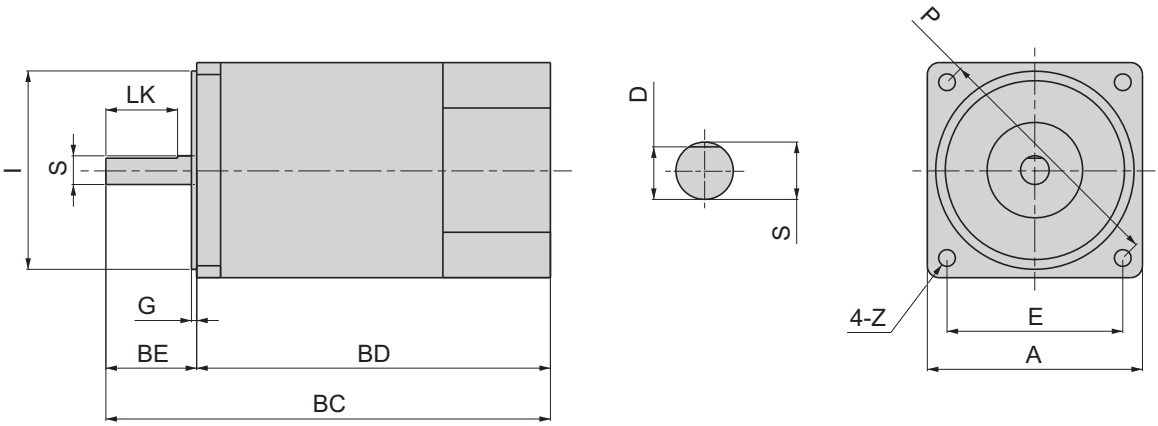

Dimension (mm)

Model	Output (w)	A	BC	BD	BE	I	G	P	Z	E	Output Shaft			Weight (KG)
											LK	S	D	
2	6W	60	100	76	24	54	2.2	70	5	49.5	18	6	5.2	0.8
3	15W	70	112	80	32	64	2.2	82	6	58	25	6	5.2	1.1
4	25W	80	118	86	32	73	2.2	94	7	66.5	25	8	7	1.5
5	40W	90	144	106	38	83	2.2	104	7	73.6	30	10	9	2.4
	60W	90	163	125	38	83	2.2	104	7	73.6	30	12	11	2.5
	90W	90	186	148	38	83	2.2	104	7	73.6	30	12	11	3.3
	120W	90	186	148	38	83	2.2	104	7	73.6	30	12	11	3.3
	150W	90	186	148	38	83	2.2	104	7	73.6	30	12	11	3.3

☐ 120W above: 30 mins rated time limited.

"Rated Time limited" means motor must be cooled down after 30mis continuous running. Otherwise, motor is possible to be damaged.

Motor with Terminal Box

Conforms to Europe safety standards, IP54 are available to be ordered.

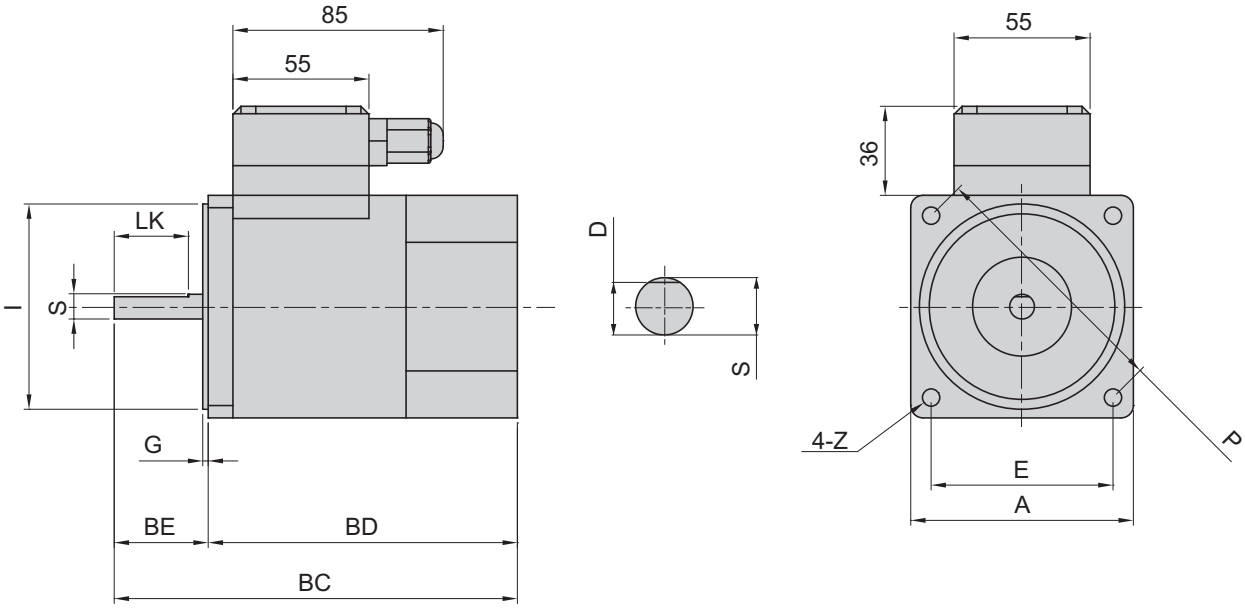

Dimension (mm)

Model	Output (w)	A	BC	BD	BE	I	G	P	Z	E	Output Shaft			Weight (KG)
											LK	S	D	
2	6W	60	100	76	24	54	2.2	70	5	49.5	18	6	5.2	1.02
3	15W	70	112	80	32	64	2.2	82	6	58	25	6	5.2	1.38
4	25W	80	118	86	32	73	2.2	94	7	66.5	25	8	7	1.6
5	40W	90	144	106	38	83	2.2	104	7	73.6	30	10	9	2.78
	60W	90	163	125	38	83	2.2	104	7	73.6	30	12	11	2.78
	90W	90	186	148	38	83	2.2	104	7	73.6	30	12	11	3.65
	120W	90	186	148	38	83	2.2	104	7	73.6	30	12	11	3.65
	150W	90	186	148	38	83	2.2	104	7	73.6	30	12	11	3.65

☐ 120W above: 30 mins rated time limited.

* Reversible motor: 30 mins rated time limited.

List of Motor Specifications

Induction Motor & Continuous Ratings

Model		Output (W)	Voltage (V)	Pole (P)	Frequ-ency (Hz)	Starting Torque (Kgcm)	Rated Torque (Kgcm)	Rated Current (A)	Rated RPM (r/min)	Capacitor Capacity (μ)
Round Shaft	GN/GU									
2IK6A-A	2IK6GN-A	6	1Ø 110	4	50	0.44	0.50	0.25	1200	2.5(250V)
					60	0.45	0.38	0.22	1400	
2IK6A-C	2IK6GN-C		1Ø 220	4	50	0.40	0.45	0.18	1200	0.8(450V)
					60	0.53	0.38	0.14	1400	
3IK15A-A	3IK15GN-A	15	1Ø 110	4	50	0.81	1.22	0.38	1200	4(250V)
					60	1.00	0.98	0.34	1400	
3IK15A-C	3IK15GN-C		1Ø 220	4	50	0.88	1.22	0.21	1200	1(450V)
					60	0.86	0.97	0.19	1400	
3IK15A-S	3IK15GN-S	15	3Ø 220	4	50	3.6	1.37	0.19	1250	--
					60	4.2	1.1	0.17	1450	
3IK15A-U	3IK15GN-U		3Ø 380	4	50	3.6	1.37	0.1	1250	--
					60	4.2	1.1	0.09	1450	
4IK25A-A	4IK25GN-A	25	1Ø 110	4	50	1.30	1.87	0.65	1250	6(250V)
					60	1.20	1.48	0.62	1500	
4IK25A-C	4IK25GN-C		1Ø 220	4	50	1.45	1.82	0.3	1250	1.5(450V)
					60	1.57	1.50	0.27	1500	
4IK25A-S	4IK25GN-S	25	3Ø 220	4	50	5.94	2.06	0.27	1300	--
					60	4.86	1.63	0.24	1550	
4IK25A-U	4IK25GN-U		3Ø 380	4	50	5.90	1.75	0.16	1300	--
					60	4.86	1.46	0.14	1550	
5IK40A-A	5IK40GN-A	40	1Ø 110	4	50	2.26	3.00	0.76	1300	10(250V)
					60	2.17	2.50	0.72	1550	
5IK40A-C	5IK40GN-C		1Ø 220	4	50	2.17	3.40	0.4	1300	2.5(450V)
					60	2.15	2.84	0.38	1550	
5IK40A-S	5IK40GN-S	40	3Ø 220	4	50	12.3	3.17	0.48	1350	--
					60	9.26	2.80	0.44	1600	
5IK40A-U	5IK40GN-U		3Ø 380	4	50	9.45	2.58	0.26	1350	--
					60	12.06	3.00	0.24	1600	
5IK60A-A	5IK60(GN-GU)-A	60	1Ø 110	4	50	3.52	4.86	1.2	1300	14(250V)
					60	3.65	4	1.14	1550	
5IK60A-C	5IK60(GN-GU)-C		1Ø 220	4	50	3.86	5	0.71	1300	3.5(450V)
					60	3.56	3.85	0.68	1550	
5IK60A-S	5IK60(GN-GU)-S	60	3Ø 220	4	50	15.2	4.3	0.62	1350	--
					60	11.8	4	0.56	1600	
5IK60A-U	5IK60(GN-GU)-U		3Ø 380	4	50	15	4.85	0.34	1350	--
					60	11.5	3.88	0.31	1600	
5IK90A-A	5IK90GU-A	90	1Ø 110	4	50	4.87	5.96	1.6	1300	22(250V)
					60	5	5.1	1.56	1550	
5IK90A-C	5IK90GU-C		1Ø 220	4	50	4.5	6.35	0.85	1300	5(450V)
					60	4.2	5.2	0.95	1550	
5IK90A-S	5IK90GU-S	90	3Ø 220	4	50	15.4	5.8	0.84	1350	--
					60	12	5.5	0.76	1600	
5IK90A-U	5IK90GU-U		3Ø 380	4	50	15.2	6.35	0.5	1350	--
					60	11.7	5.38	0.45	1600	
5IK120A-A	5IK120GU-A	120	1Ø 110	4	50	5.47	7.76	2.14	1300	25(250V)
					60	5.6	6.9	2.1	1550	
5IK120A-C	5IK120GU-C		1Ø 220	4	50	5.81	7.9	0.95	1300	6(450V)
					60	5.51	6.75	1	1550	
5IK120A-S	5IK120GU-S	120	3Ø 220	4	50	20.9	7.7	1.31	1350	--
					60	17.5	7.4	1.28	1600	
5IK120A-U	5IK120GU-U		3Ø 380	4	50	20.7	8.25	0.49	1350	--
					60	17.2	7.28	0.47	1600	
5IK150A-A	5IK150GU-A	150	1Ø 110	4	50	12.97	9.46	3	1300	30(250V)
					60	13.1	8.6	2.68	1600	
5IK150A-C	5IK150GU-C		1Ø 220	4	50	13.31	9.6	1.21	1300	8(450V)
					60	13.01	8.45	1.24	1600	
5IK150A-S	5IK150GU-S	150	3Ø 220	4	50	28.4	9.4	1.33	1300	--
					60	25	9.1	1.3	1600	
5IK150A-U	5IK150GU-U		3Ø 380	4	50	28.2	9.95	0.51	1300	--
					60	24.7	8.98	0.49	1600	

List of Motor Specifications

Reversible Motor & 30 Min Ratings

Model		Output (W)	Voltage (V)	Pole (P)	Frequ-ency (Hz)	Starting Torque (Kgcm)	Rated Torque (Kgcm)	Rated Current (A)	Rated RPM (r/min)	Capacitor Capacity (μ)
Round Shaft	GN/GU									
2RK6A-A	2RK6GN-A	6	1Ø 110	4	50	0.55	0.51	0.25	1250	3(250V)
					60	0.54	0.42	0.28	1550	
2RK6A-C	2RK6GN-C		1Ø 220	4	50	0.62	0.46	0.12	1250	1(450V)
					60	0.60	0.40	0.14	1550	
3RK15A-A	3RK15GN-A	15	1Ø 110	4	50	1.11	1.23	0.42	1250	6(250V)
					60	1.10	1.00	0.46	1550	
3RK15A-C	3RK15GN-C		1Ø 220	4	50	1.14	1.27	0.2	1250	1.5(450V)
					60	1.15	1.03	0.22	1550	
4RK25A-A	4RK25GN-A	25	1Ø 110	4	50	1.50	1.91	0.6	1250	8(250V)
					60	1.50	1.55	0.68	1550	
4RK25A-C	4RK25GN-C		1Ø 220	4	50	2.05	1.90	0.33	1250	2(450V)
					60	2.09	1.54	0.36	1550	
5RK40A-A	5RK40GN-A	40	1Ø 110	4	50	2.54	3.25	0.85	1250	12(250V)
					60	2.73	2.56	1	1550	
5RK40A-C	5RK40GN-C		1Ø 220	4	50	2.91	3.11	0.45	1250	3(450V)
					60	2.80	2.49	0.47	1550	
5RK60A-A	5RK60(GN-GU)-A	60	1Ø 110	4	50	2.52	3.36	1.74	1250	16(250V)
					60	2.65	2.5	1.85	1550	
5RK60A-C	5RK60(GN-GU)-C		1Ø 220	4	50	2.86	3.5	0.72	1250	4(450V)
					60	2.56	2.35	0.76	1550	
5RK60A-S	5RK60(GN-GU)-S	60	3Ø 220	4	50	14.2	2.8	0.64	1250	
					60	10.8	2.5	0.58	1550	
5RK60A-U	5RK60(GN-GU)-U		3Ø 380	4	50	14	3.35	0.36	1250	
					60	10.5	2.38	0.33	1550	
5RK90A-A	5RK90GU-A	90	1Ø110	4	50	3.87	4.46	1.9	1200	25(250V)
					60	4	3.6	2	1500	
5RK90A-C	5RK90GU-C		1Ø220	4	50	3.5	4.85	0.95	1200	6(450V)
					60	3.2	3.7	1	1500	
5RK90A-S	5RK90GU-S	90	3Ø 220	4	50	14.4	4.3	0.86	1200	
					60	11	4	0.76	1500	
5RK90A-U	5RK90GU-U		3Ø 380	4	50	14.2	4.85	0.52	1200	
					60	10.7	3.88	0.47	1500	
5RK120A-A	5RK120GU-A	120	1Ø 110	4	50	4.47	6.26	2.1	1200	27(250V)
					60	4.6	5.4	2.25	1550	
5RK120A-C	5RK120GU-C		1Ø 220	4	50	4.81	6.4	0.95	1200	7(450V)
					60	4.51	5.25	1	1550	
5RK120A-S	5RK120GU-S	120	3Ø 220	4	50	19.9	6.2	1.12	1200	
					60	16.5	5.9	1.1	1550	
5RK120A-U	5RK120GU-U		3Ø 380	4	50	19.7	6.75	0.52	1200	
					60	16.2	5.78	0.5	1550	
5RK150A-A	5RK150GU-A	150	1Ø 110	4	50	11.97	7.96	2.5	1250	30(250V)
					60	12.1	7.1	2.65	1600	
5RK150A-C	5RK150GU-C		1Ø 220	4	50	12.31	8.1	1.21	1250	8(450V)
					60	12.01	6.95	1.28	1600	
5RK150A-S	5RK150GU-S	150	3Ø 220	4	50	27.4	7.9	1.14	1250	
					60	24	7.6	1.12	1600	
5RK150A-U	5RK150GU-U		3Ø 380	4	50	27.2	8.45	0.54	1250	
					60	23.7	7.48	0.52	1600	

Suitable for applications where the load must always be held in place.
Power off activates electromagnetic brake for load holding.
Apply for vertical lifting system.

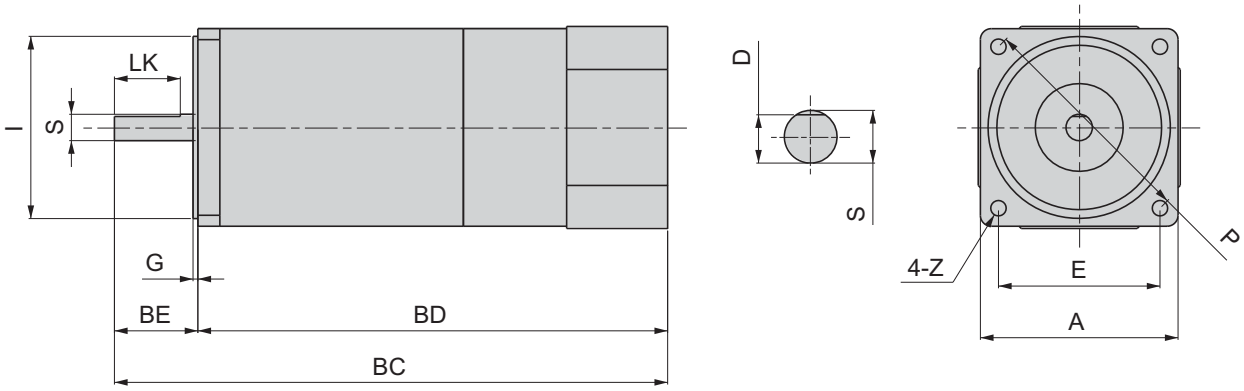

Dimension (mm)

Model	Outupt (w)	A	BC	BD	BE	I	G	P	Z	E	Output Shaft			Weight (KG)
											LK	S	D	
2	6W	60	152.5	128.5	24	54	2.2	70	5	49.5	18	6	5.2	1
3	15W	70	164.2	132.2	32	64	2.2	82	6	58	25	6	5.2	1.5
4	25W	80	169.2	137.2	32	73	2.2	94	7	66.5	25	8	7	2
5	40W	90	200.5	162.5	38	83	2.2	104	7	73.6	30	10	9	3
	60W	90	226.5	188.5	38	83	2.2	104	7	73.6	30	12	11	3.3
	90W	90	251.9	213.9	38	83	2.2	104	7	73.6	30	12	11	4
	120W	90	251.9	213.9	38	83	2.2	104	7	73.6	30	12	11	4

☐ 120W above: 30 mins rated time limited.

* Reversible motor: 30 mins rated time limited.

Clutch Brake Motor

Precisely position.
Idea for high-frequency starting and stopping.

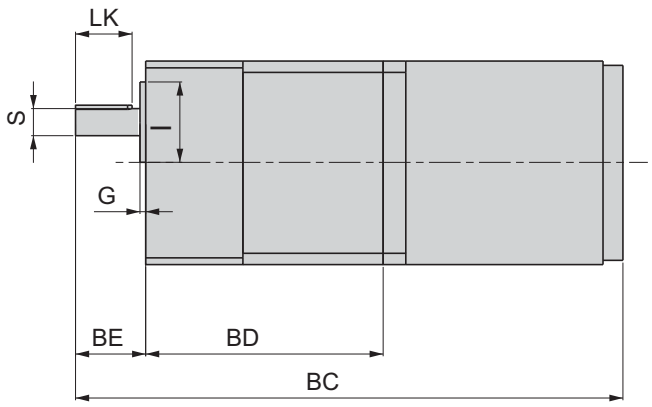

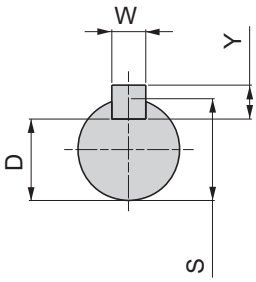

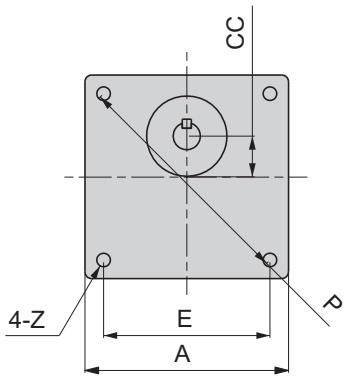

Dimension (mm)

Model	Output (w)		A	BC	BD	BE	I	G	P	Z	E	CC	Output Shaft			Weight (KG)
													S	D	WxYxLK	
5	40W (GN)	3~18R	90	246	105	35	34	2.2	104	M6	73.6	18	12	9.5	4x4x25	5.52
		20~180R	90	262	121	35	34	2.2	104	M6	73.6	18	12	9.5	4x4x25	5.54
	60W (GN)	3~18R	90	265	105	35	34	2.2	104	M6	73.6	18	12	9.5	4x4x25	5.52
		20~180R	90	281	121	35	34	2.2	104	M6	73.6	18	12	9.5	4x4x25	5.54
	60W(GU)		90	287	127	35	34	2.2	104	M6	73.6	18	15	12	5x5x25	5.54
	90W(GU)		90	313	127	38	34	2.2	104	M6	73.6	18	15	12	5x5x25	6.39
	120W(GU)		90	313	127	38	34	2.2	104	M6	73.6	18	15	12	5x5x25	6.39

* Reversible motor: 30 mins rated time limited. ☐ 120W above: 30 mins rated time limited.

Speed Variable Motor

Continuous variable transmission is suitable for operation of speed control with single phase motor. Speed control range:
90-1350 rpm/min (50Hz)
90-1600 rpm/min (60Hz)
Note1:Three-phase motor is requested to corporate with inverter.
Note 2:Speed control range is restricted to no-loading circumstance.

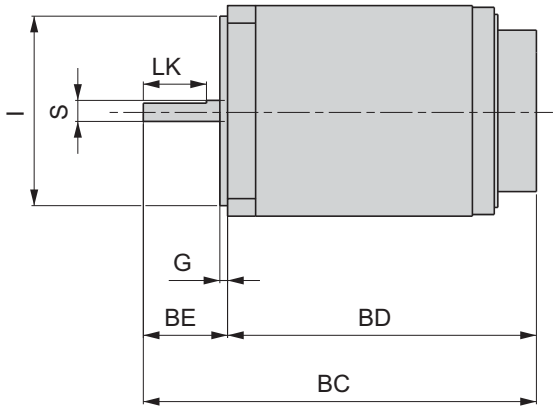

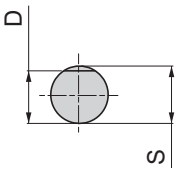

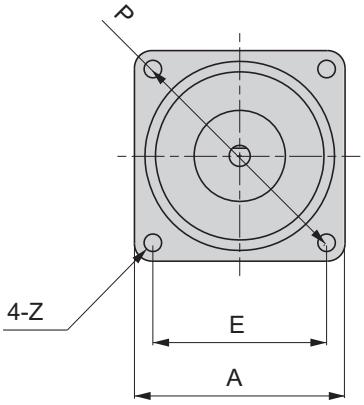

Dimension (mm)

Model	Outpu (w)	A	BC	BD	BE	I	G	P	Z	E	Output Shaft			Weight (KG)
											LK	S	D	
2	6W	60	112	88	24	54	2.2	70	5	49.5	18	6	5.2	0.9
3	15W	70	124	92	32	64	2.2	82	6	58	25	6	5.2	1.6
4	25W	80	130	98	32	73	2.2	94	7	66.5	25	8	7	2.5
5	40W	90	156	118	38	83	2.2	104	7	73.6	30	10	9	2.6
	60W	90	175	137	38	83	2.2	104	7	73.6	30	12	11	3.4
	90W	90	200	162	38	83	2.2	104	7	73.6	30	12	11	3.4
	120W	90	200	162	38	83	2.2	104	7	73.6	30	12	11	3.4
	150W	90	200	162	38	83	2.2	104	7	73.6	30	12	11	3.4

* Reversible motor: 30 mins rated time limited.

Standard Specification

Motor Type	Operating Time	Output (W)	Voltage (V)	Frequency (HZ)	Rated RPM (rpm)	Starting Torque (Kgcm)	Rated Torque (Kgcm)	Rated Current (A)	Capacitor Capacity (μF)
2TK3A(GN)-A	5 mins/ Indefinite	3/1	110/60	50	750	0.7/0.25	0.39/0.13	0.49/0.3	7
		3.5/1.2	110/60	60	900	0.7/0.25	0.38/0.13	0.49/0.3	7
3TK6A(GN)-A	5 mins/ Indefinite	6/2.5	110/60	50	750	1.4/0.55	0.78/0.32	0.72/0.48	10
		7.5/2.7	110/60	60	900	1.4/0.45	0.82/0.29	0.72/0.48	8
4TK10A(GN)-A	5 mins/ Indefinite	10/3.5	110/60	50	750	2.2/0.75	1.30/0.46	0.91/0.55	12
		12/3.5	110/60	60	900	2.1/0.7	1.30/0.38	0.91/0.55	8
5TK20A(GN)-A	5 mins/ Indefinite	20/6	110/60	50	750	3.5/1.1	2.6/0.78	1.22/0.76	15
		20/6	110/60	60	900	3.0/1.0	2.2/0.65	1.22/0.76	12
5TK40A(GN/GU)-AF	5 mins/ Indefinite	40/14	110/60	50	750	7.6/3.2	5.2/1.85	1.7/1	40
		40/14	110/60	60	900	6.3/2.3	4.4/1.55	1.7/1	25
2TK3A(GN)-C	5 mins/ Indefinite	3/1	220/110	50	750	0.7/0.25	0.39/0.13	0.23/0.15	1.5
		3.5/1.2	220/110	60	900	0.7/0.25	0.38/0.13	0.25/0.16	1.5
3TK6A(GN)-C	5 mins/ Indefinite	6/2.5	220/110	50	750	1.4/0.55	0.78/0.32	0.4/0.22	2
		7.5/2.7	220/110	60	900	1.4/0.45	0.82/0.29	0.4/0.25	2
4TK10A(GN)-C	5 mins/ Indefinite	10/3.5	220/110	50	750	2.2/0.75	1.30/0.46	0.47/0.27	2
		12/3.5	220/110	60	900	2.1/0.7	1.30/0.38	0.51/0.31	2
5TK20A(GN)-C	5 mins/ Indefinite	20/6	220/110	50	750	3.5/1.1	2.6/0.78	0.74/0.4	3
		20/6	220/110	60	900	3.0/1.0	2.2/0.65	0.72/0.39	3
5TK40A(GN/GU)-CF	5 mins/ Indefinite	40/14	220/110	50	750	7.6/3.2	5.2/1.85	1.1/0.6	6
		40/14	220/110	60	900	6.3/2.3	4.4/1.55	1.08/0.55	6

- Add "R" means torque motor with voltage adjust controller.
- Voltage : 110/60 (Supply voltage is 110V, however adjusting to 110V by VR for 5 mins operating, to 60V below for indefinite operating.)
  Voltage : 220/110 (Supply voltage is 220V, however adjusting to 220V by VR for 5 mins operating, to 110V below for indefinite operating.)

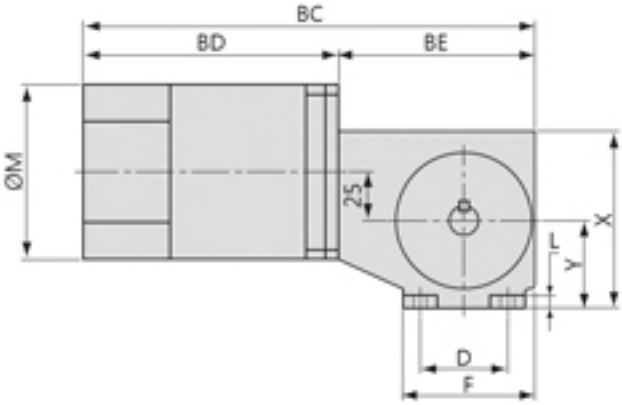

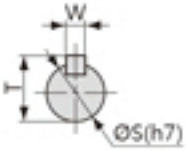

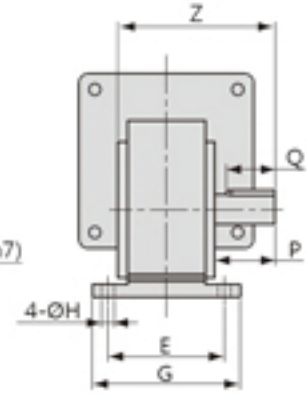

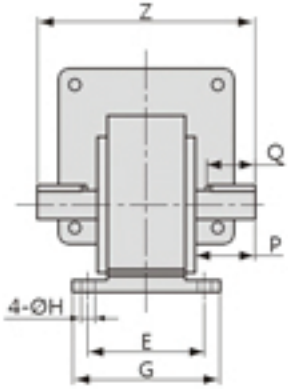

Dimension (mm)

Output (w)	BC	BD	BE	D	E	F	G	H	L	M	X	Y	Shaft Direction Z			Output Shaft				
													L	R	D	P	Q	W	S	T
40W	214	113	101	45	60	68	76	6.8	6.5	90	91	45	81	81	112	31	25	5	15	17
60W	233	132	101	45	60	68	76	6.8	6.5	90	91	45	81	81	112	31	25	5	15	17
90W	256	155	101	45	60	68	76	6.8	6.5	90	91	45	81	81	112	31	25	5	15	17

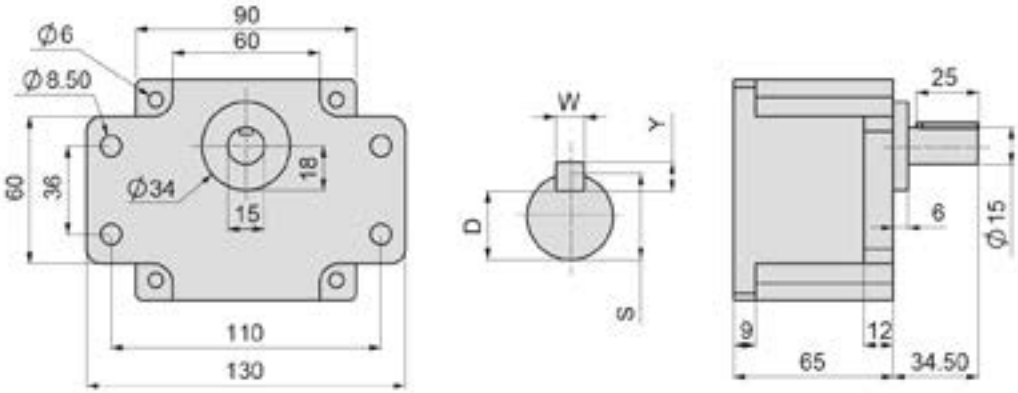

GU Flange Type
(With Ear)

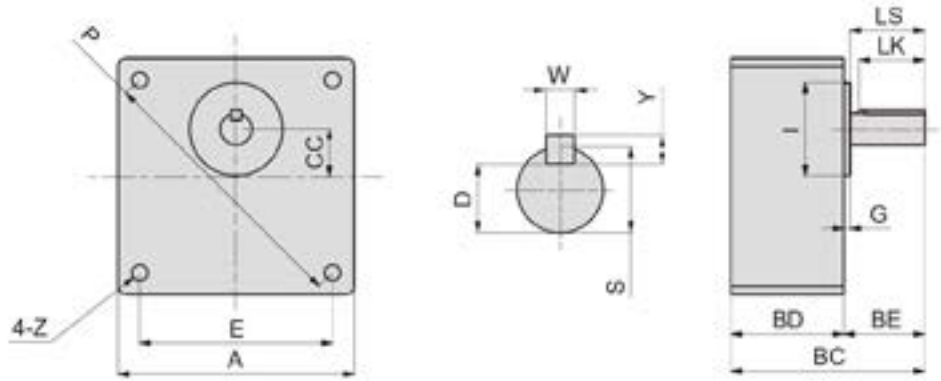

GU Box Type

Dimension (mm)

Model	Output (w)	Ratio	A	BC	BD	BE	CC	I	G	P	Z	E	Output Shaft				Weight (KG)
													LS	S	D	WxYxLK	
5	60W (GU)	3~18	90	101	65	36	18	34	6	104	M6	73.6	30	15	12	5x5x25	1.2
		20~180															1.4
	90W (GU)	3~18	90	101	65	36	18	34	6	104	M6	73.6	30	15	12	5x5x25	1.2
		20~180															1.4
	120W (GU)	3~18	90	101	65	36	18	34	6	104	M6	73.6	30	15	12	5x5x25	1.2
		20~180															1.4
	150W (GU)	3~18	90	101	65	36	18	34	6	104	M6	73.6	30	15	12	5x5x25	1.2
		20~180															1.4

1:10

If reducer can not provide enough ratio, it could be considered to add one or more reducer to get preferable ratio.

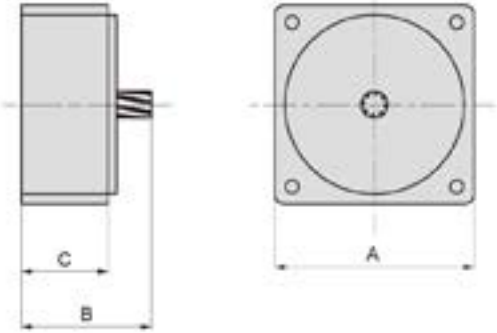

Dimension (mm)

Model	Output (w)	A	B	C
2	6W	60	39	26
3	15W	70	39	26
4	25W	80	39	26
5	GN 40W~60W	90	59	40
	GU 60W~150W	90	59	40

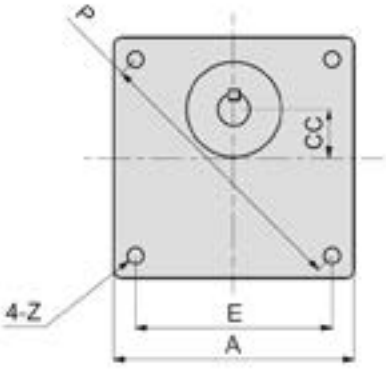

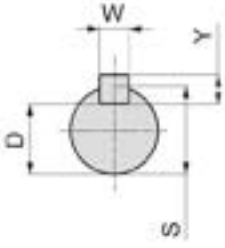

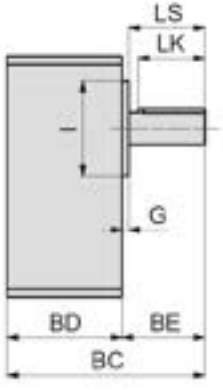

GU Standard model

Dimension (mm)

Model	Output (w)	Ratio	A	BC	BD	BE	CC	I	G	P	Z	E	Output Shaft				Weight (KG)
													LS	S	D	WxYxLK	
2	6W (GN)	3~18	60	64	32	32	10	18	4.5	70	M4	49.5	27.5	8	7	--	0.34
		20~180		74	42												0.39
3	15W (GN)	3~18	70	64	32	32	15	30	2	82	M5	58	30	10	7.5	4x4x25	0.52
		20~180		74	42												0.58
4	25W (GN)	3~18	80	68	36	32	15	34	2.5	94	M5	66.5	29.5	10	7.5	4x4x25	0.66
		20~180		82	50												0.81
5	40W (GN)	3~18	90	74	43	32	18	34	2.5	104	M6	73.6	28.5	12	9.5	4x4x25	1.2
		20~180		90	59												1.4
	60W (GN)	3~18	90	74	43	32	18	34	2.5	104	M6	73.6	28.5	12	9.5	4x4x25	1.2
		20~180		90	59												1.4

US/UX MOTOR SPEED CONTROLLER

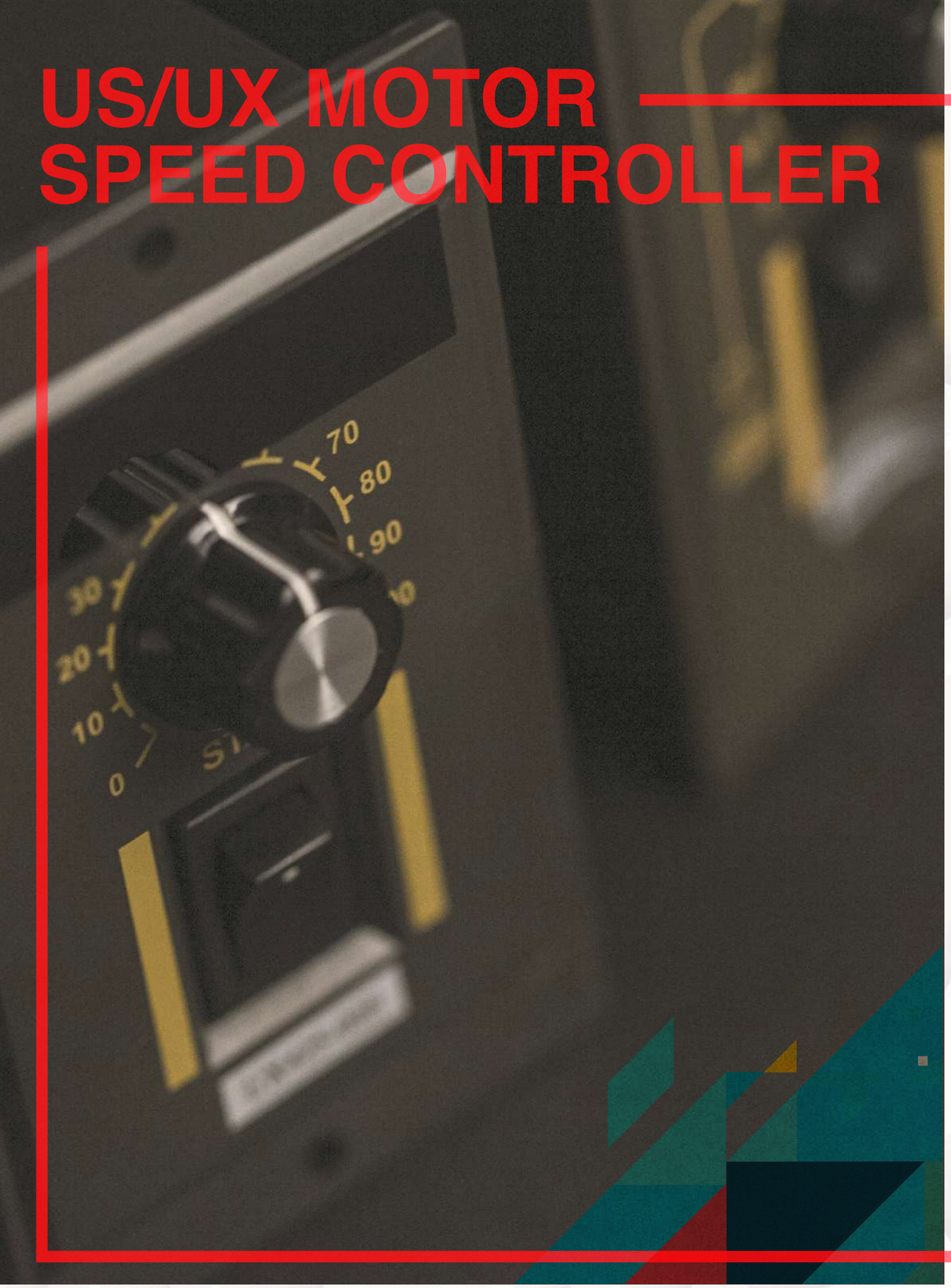

Indication of Combinated Speed Controller

US	315	–	0	2
Model	**Available Output**		**Type**	**Voltage**
US Combinated speed controller UX Digital speed controller	206 : 6W 315 : 15W 425 : 25W 540 : 40W 560 : 60W 590 : 90W 5120 : 120W 5150 : 150W		0: Induction 1: Reversible	1: 1Ø110V(60Hz) 2: 1Ø220V(60Hz) 2E: 1Ø220~240V(50Hz) 10: 1Ø100V(60Hz) 20: 1Ø200V(60Hz) 10E: 1Ø100V(50Hz) 20E: 1Ø200V(50Hz)

US Speed Controller

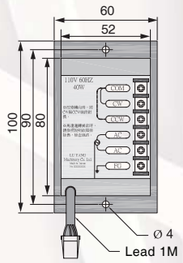

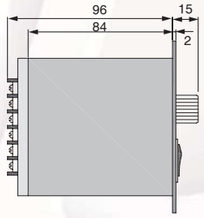

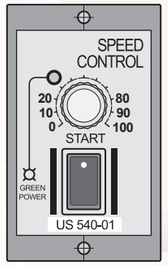

UX Digital Speed Controller

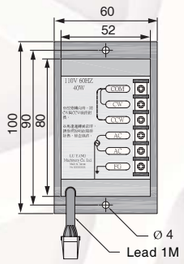

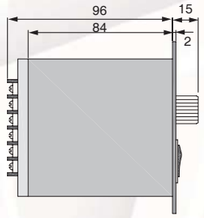

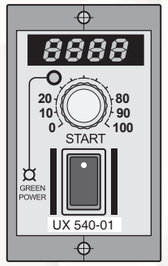

Type	Voltage (V)	Frequency (Hz)	Rated Current (A)	Output (W)	Speed Range (RPM)	Speed Rate of Change (%)	Velocity Reaction	Electronic Brake	Velocity Safety	Ambient Condition
01	100~110V	60	5	6-150	90~1600	5%	0.5 (Sec)	--	◎	-10° C~+50° C
02	200~220V									
02E	200~240V	50	5	6-150	90~1350	5%	0.5 (Sec)	--	◎	-10° C~+50° C

Separated Speed Controller

Indication of Separated Speed Controller

S	S	11
Model	**Feature**	**Voltage**
S : Separated speed controllere	S : Speed control	11: 1Ø100~110V(60Hz) 11E: 1Ø100V(50Hz) 22: 1Ø200~220V(60Hz) 22E: 1Ø200~240V(50Hz)

SS11 Separated Speed Controller

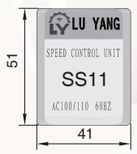

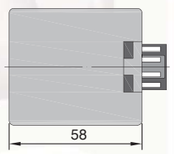

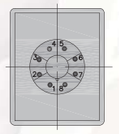

■ Controller Foot Place

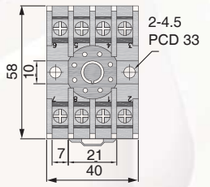

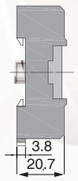

SS22 Separated Speed Controller

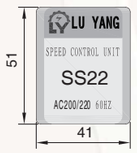

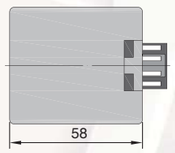

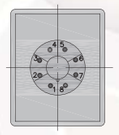

■ Controller Foot Place

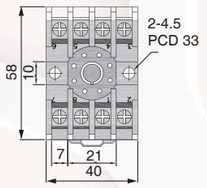

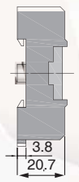

Type	Voltage (V)	Frequency (Hz)	Rated Current (A)	Output (W)	Speed Range (RPM)	Speed Rate of Change (%)	Velocity Reaction	Electronic Brake	Velocity Safety	Ambient Condition
SS11	100~110V	60	3	6-150	90~1600	5%	0.5 (Sec)	--	◎	-10°C~+50°C
SS22	200~220V									
SS11E	100V	50	3	6-150	90~1350	5%	0.5 (Sec)	--	◎	-10°C~+50°C
SS22E	200~240V									

Instantaneous Brake Pack

Indication of Instantaneous Brake Pack

SB	32	–	IN
Model	**Voltage**		**Feature**
SB : Electronic instantaneous brake pack	31: 1Ø100~110V 32: 1Ø200~240V		IN: Inch

SB31-IN Instantaneous Brake Pack

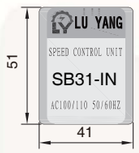

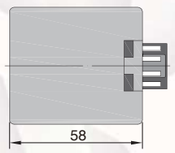

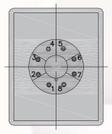

■ Foot Place

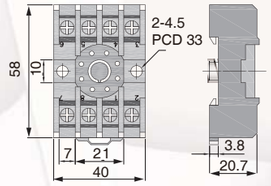

SB32-IN Instantaneous Brake Pack

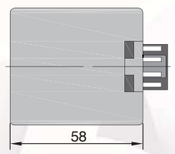

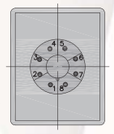

■ Foot Place

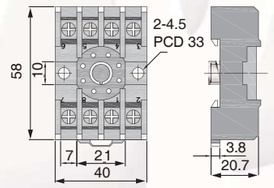

Speed Control Brake Pack

Indication of Speed Control & Brake Pack

S	S	31	–	HR
Model	**Feature**	**Voltage**		**Other**
S : Separated	S : Speed control	31: 1Ø100~110V (60Hz) 31E: 1Ø100V (50Hz) 32: 1Ø200~220V (60Hz) 32E: 1Ø200~240V (50Hz)		HR: Speed variable brake

SS31-HR Instantaneous Brake +Speed Control

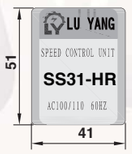

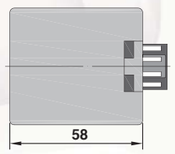

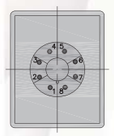

■ Foot Place

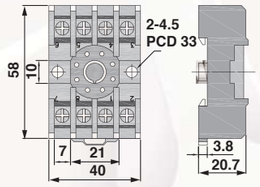

SS32-HR Instantaneous Brake +Speed Control

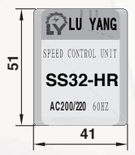

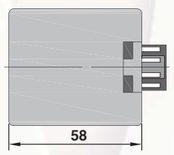

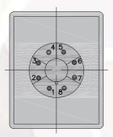

■ Foot Place

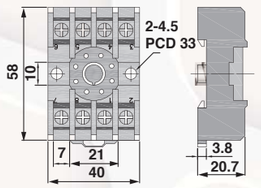

Model	Voltage (V)	Freq-ency (Hz)	Rated Current (A)	Output (W)	Speed Range	Speed Rate of Change (%)	Velocity Reaction	Electronic Brake	Velocity Safety	Ambient Condition
SS31-HR	100~110V	60	5	6-120	90~1600	5%	0.5 (Sec)	○	◎	-10°C~+50°C
SS32-HR	200~220V									
SS31E-HR	100V	50	5	6-120	90~1350	5%	0.5 (Sec)	○	◎	-10°C~+50°C
SS32E-HR	200~240V									

Wire Drawing - K Series

Connection Diagram of Controller

Note:
1. Confirm controller and motor output specification before connection.
2. While using motor overheated protection, it should be connected in series with motor control cables.
3. Speed Control motor with fan should be connected to entry power.
4. As speed Control motor with excitationless brake, excitationless power supply should be connected in parallel with motor power supply.
5. As motor stops 0.5 seconds, it isn't allowed to run CW or CCW at this moment.
6. The switch contact must be AC 125V 5A or AC 250V 5A above.
7. The motor is allowed to use under 90°C.

SS31-HR SS32-HR(8Pin)

***** Pin 3, 8, 5, 4 Signal Input** **Check Carefully Before Applying AC**

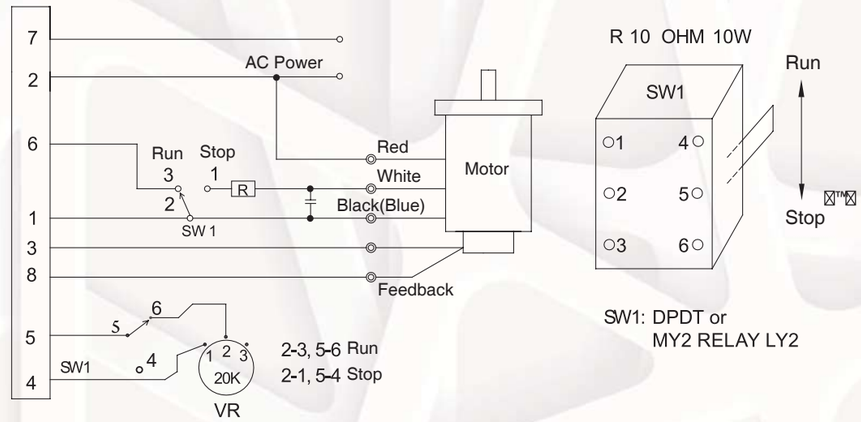

SS11 SS22

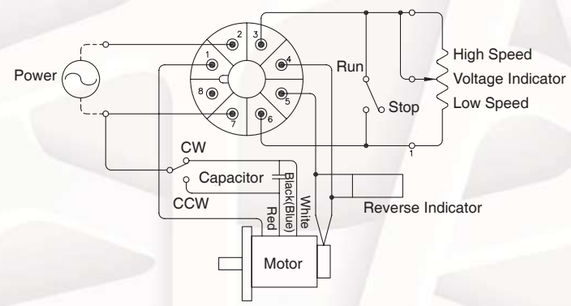

SB31-IN SB32-IN

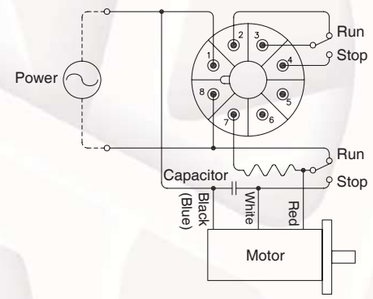

L 形腳架　L Stand

PAL-3N(70mm)

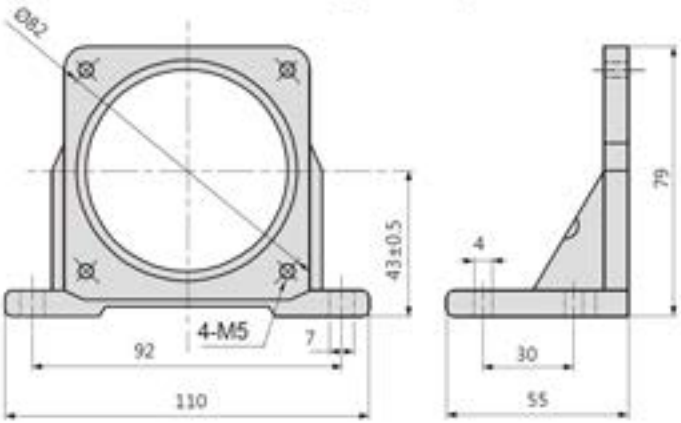

PAL-4N(80mm)

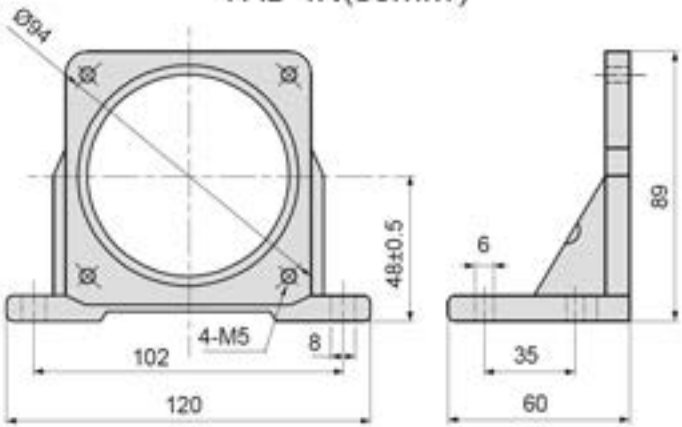

PAL-5N(90mm)

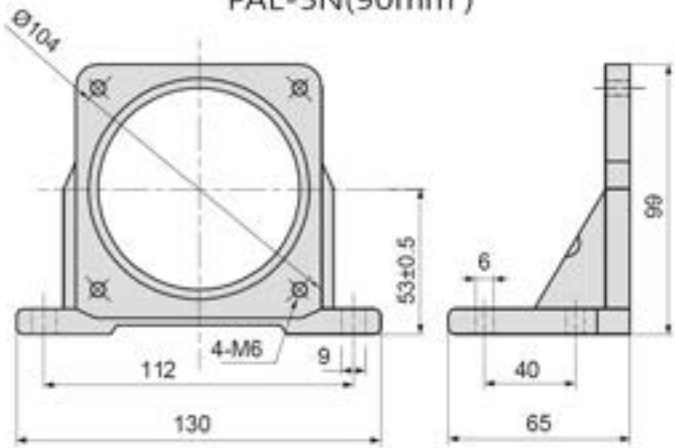

DC Motor

Indication of DC Motor

DC 05 GN 12 – 1800

Model	Dimension	Shaft	Voltage	RPM
Permanent Magnet DC Motor	05 : 60mm 06 : 70mm 07 : 80mm 08 : 90mm 10 : 90mm 12 : 90mm	A : Round Shaft AK : Round Shaft with keyway GN : Pinion Cut Shaft GU : Enhanced Pinion Cut Shaft GA : Alloy Worm	12 : 12V 24 : 24V 90 : 90V 180 : 180V	1800 3000

A

GN

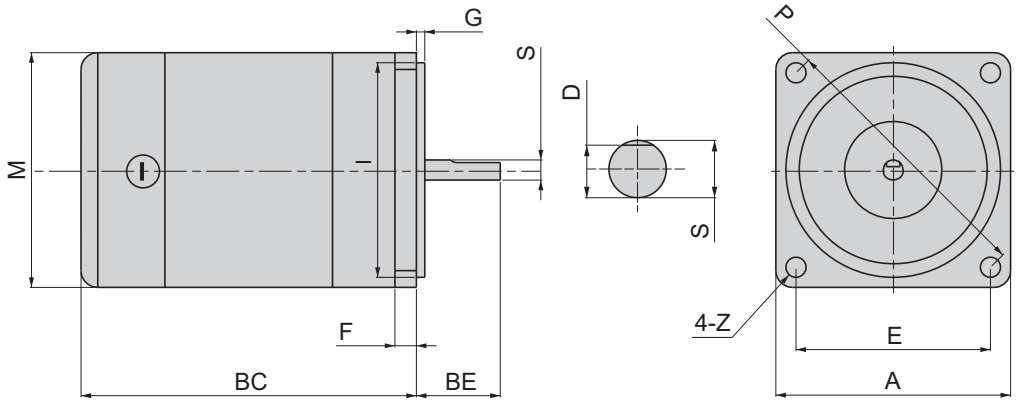

Dimension (mm)

Type		A	BC	BE	I	M	F	S	G	Z	P	E
DC	05	60	95	24	54	63	6.4	6	2	4.5	70	49.5
	06	70	100	25	64	70	6.4	6	2.5	6	82	58
	07	80	109	25	73	70	6.5	8	2.5	6	94	66.5
	08	90	118	32	83	80	8.4	10	2.3	7	104	73.6
	10	90	138	32	83	80	8.4	12	2.3	7	104	73.6
	12	90	161	32	83	90	10.5	12	2.8	8	104	73.6

* Induction : 1800 RPM
* 30 mins rated time limited : 3000 RPM

"Rated Time limited" means motor must be cooled down after 30mis continuous running. Otherwise, motor is possible to be damaged.

Standard Specification

Motor Type			Voltage (V)	Rated Current (A)	Rated RPM (RPM)	Output		Weight (Kg)	Collocated Gearhead
Model		Motor Shaft				Watt (W)	Torque (Kg-cm)		
DC	05	A GN	12/24	1.4/0.7	1800	10	0.6	0.7	GN : 2GN
				2.8/1.4	3000	20	0.7		
			90	0.23	1800	10	0.6		
				0.37	3000	20	0.7		
	06	A GN	12/24	2.2/1.1	1800	20	1.13	1.0	GN : 3GN
				4.0/2.0	3000	36	1.17		
			90/180	0.3/0.15	1800	20	1.13		
				0.53/0.26	3000	36	1.17		
	07	A GN	12/24	3.3/1.65	1800	30	1.70	1.3	GN : 4GN
				6.6/3.3	3000	60	1.95		
			90/180	0.44/0.22	1800	30	1.70	1.7	
				0.88/0.44	3000	60	1.95		
	08	A GN	12/24	4.4/2.2	1800	40	2.26	1.7	GN : 5GN
				7.7/3.86	3000	70	2.27		
			90/180	0.59/0.29	1800	40	2.26		
				1.03/0.5	3000	70	2.27		
	10	A GU	12/24	7.2/3.5	1800	65	3.68	2.2	GU : 5GU
				13.2/6.6	3000	120	3.89		
			90/180	0.96/0.48	1800	65	3.68	2.3	
				1.77/0.88	3000	120	3.89		
	12	A GU	12/24	11/5.5	1800	100	5.66	3.4	GU : 5GU
				22/11	3000	200	6.49		
			90/180	1.47/0.74	1800	100	5.66	3.5	
				2.94/1.47	3000	200	6.49		
	18	A GU	90/180	2.68/1.34	1800	200	10.8	3.62	GU : 5GU (30 mins rating.)

※ Please contact us while the motor is running under the low temperature environment.
※ Induction : 1800 RPM
※ 30 mins rating : 3000 RPM

LH
Horizontal Alloy Gearmotor

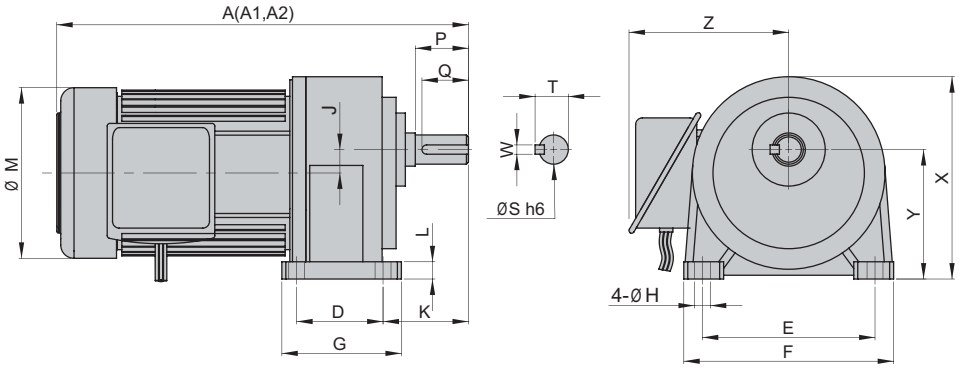

Dimension (mm)

Output W(HP)	Ratio	Housing	Code	A	A1	A2	D	E	F	G	H	J	K	L	M	X	Y	Z	Output Shaft				
																			S	P	W	T	Q
100W (1/8 HP)	3~50 (60~200)	1	18	250	285	250	40	110	135	65	9	16	49	10	130	131	88.5	120	18	30	5	20	25
	60~200	2	22	280	320	280	65	130	158	90	11	17.65	60	13	130	153	97.5	120	22	40	7	25	35
200W (1/4 HP)	3~10 (12.5~90)	1	18	270	305	290	40	110	135	65	9	16	49	10	130	131	88.5	120	18	30	5	20	25
	12.5~90 (100~200)	2	22	305	340	325	65	130	158	90	11	17.65	60	13	130	153	97.5	120	22	40	7	25	35
	100~200	3	28	315	350	335	90	140	180	120	11	24.22	66.5	16	130	174	116	120	28	45	7	31	40
400W (1/2 HP) Standard for 3-phase	3~10 (12.5~90)	2	22	325	340	-	65	130	158	90	11	17.65	63	13	130	153	97.5	135	22	40	7	25	35
	12.5~90 (100~200)	3	28	335	350	-	90	140	180	120	11	24.22	68.5	16	130	174	116	135	28	45	7	31	40
	100~200	4	32	380	395	-	130	170	210	165	12	30.22	70	20	130	198	130	135	32	55	10	35	50
400W (1/2 HP) Standard for 1-phase	3~10 (12.5~90)	2	22	340	350	360	65	130	158	90	11	17.65	63	13	162	153	97.5	135	22	40	7	25	35
	12.5~90 (100~200)	3	28	360	370	380	90	140	180	120	11	24.22	68.5	16	162	174	116	135	28	45	7	31	40
	100~200	4	32	400	410	415	130	170	210	165	12	30.22	70	20	162	198	130	135	32	55	10	35	50
750W (1 HP)	(3~25)	2	22	345	355	380	65	130	158	90	11	17.65	60	13	162	153	97.5	135	22	40	7	25	35
	3~25 (30~120)	3	28	370	375	410	90	140	180	120	11	24.22	66.5	16	162	174	116	135	28	45	7	31	40
	30~120 (125~200)	4	32	400	410	440	130	170	210	165	12	30.22	70	20	162	198	130	135	32	55	10	35	50
	125~200	5	40	465	465	500	150	210	265	198	15	36	89	24	162	250	160	135	40	65	10	43	60
1500W (2 HP)	(3~30)	3	28	420	430	-	90	140	180	120	11	24.22	68.5	16	192	174	116	135	28	45	7	31	40
	3~30 (40~100)	4	32	450	450	475	130	170	210	165	13	30.22	70	20	192	198	130	146	32	55	10	35	50
	40~100 (110~150)	5	40	510	510	510	150	210	265	198	15	36	89	24	192	250	160	146	40	65	10	43	60
	110~180	6	50	560	560	560	170	265	319	238	18	51	120	31.5	192	308	200	146	50	80	14	54	75
2200W (3 HP)	3~40 (45~80)	5	40	530	530	-	150	210	265	198	15	36	89	24	220	250	160	160	40	65	10	43	60
	45~100	6	50	580	580	-	170	265	319	238	18	51	120	31.5	220	308	200	160	50	80	14	54	75
3700W (5 HP)	3~10 (15~60)	5	40	560	560	-	150	210	265	198	15	36	89	24	220	250	160	160	40	65	10	43	60
	15~60	6	50	620	620	-	170	265	319	238	18	51	120	31.5	220	308	200	160	50	80	14	54	75

※ Ratio showed in parenthesis ( ) are used for light loading.

NOTES/ (1) A : With 3-phase motors. / A1:With 3-phase brake motors. / A2: With single-phase motors.

(2) Refer to dimension of single-phase brake motor, please contact us.

LH
Horizontal High Ratio Gearmotor

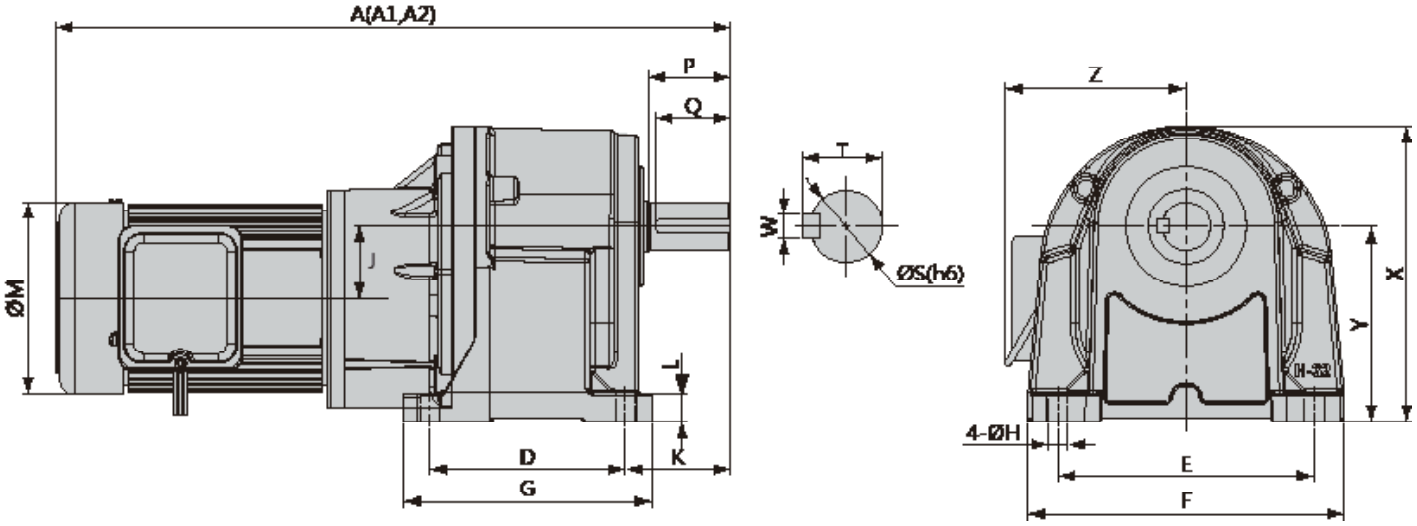

Dimension (mm)

Output W(HP)	Ratio	Housing	Code	A	A1	A2	D	E	F	G	H	J	K	L	M	X	Y	Z	Output Shaft				
																			S	P	W	T	Q
100W	(250~1800)	1#+2#	22	350	385	350	65	130	158	90	11	33.65	63	13	130	153	97.5	135	22	40	7	25	35
	250~1800	1#+3#	28	350	385	350	90	140	180	120	11	40.22	68.5	16	130	174	116	135	28	45	7	31	40
200W	(250~1800)	1#+3#	28	385	420	405	90	140	180	120	11	40.22	68.5	16	130	174	116	135	28	45	7	31	40
	250~1800	2#+4#	32	435	470	455	130	170	210	165	13	47.87	70	20	130	198	130	135	32	55	10	35	50
400W (Standard for 3-phase)	(250~1800)	2#+4#	32	455	470	500	130	170	210	165	13	47.87	70	20	130	198	130	135	32	55	10	35	50
	250~1800	3#+5#	40	510	525	555	150	210	265	198	15	52.22	89	24	130	250	162	146	40	65	10	43	60
400W (Standard for 1-phase)	(250~1800)	2#+4#	32	455	470	500	130	170	210	165	13	47.87	70	20	162	198	130	135	32	55	10	35	50
	250~1800	3#+5#	40	510	525	555	150	210	265	198	15	52.22	89	24	162	250	162	146	40	65	10	43	60

※ Ratio showed in parenthesis ( ) are used for light loading.

NOTES/ (1) A : With 3-phase motors. / A1:With 3-phase brake motors. / A2: With single-phase motors.

(2) Refer to dimension of single-phase brake motor, please contact us.

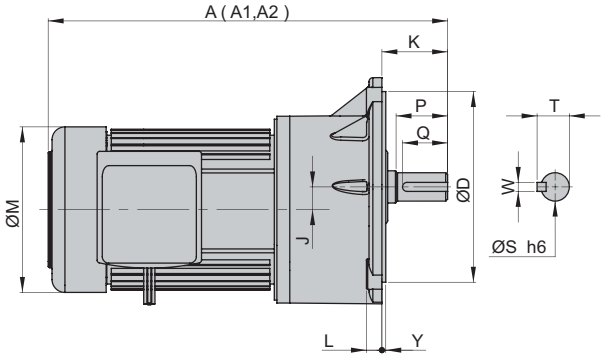

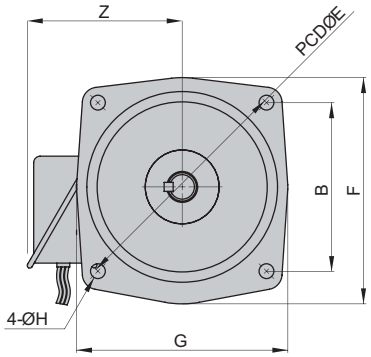

A Type Flange
(Code22、28、32、40、50)

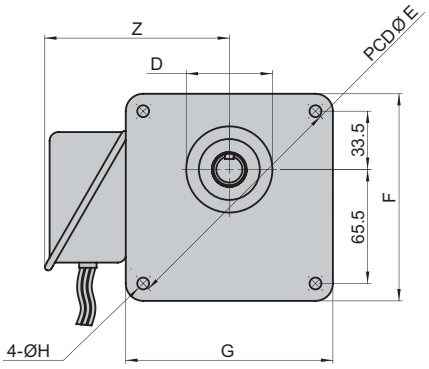

* B Type Flange
(Code18)

Dimension(mm)

Output W(HP)	Ratio	Housing	Code	A	A1	A2	B	D	E	F	G	H	J	K	L	M	Y	Z	Output Shaft S	P	W	T	Q
100W (1/8 HP)	3~50 (60~200)	1	18*	250	285	250	-	50	140	119	119	9	16	40	12	130	-	120	18	30	5	20	25
	60~200	2	22	280	320	280	130.8	148	185	176	164	11	17.65	47	12	130	3	120	22	40	7	25	35
200W (1/4 HP)	3~10 (12.5~90)	1	18*	270	305	290	-	50	140	119	119	9	16	40	12	130	-	120	18	30	5	20	25
	12.5~90 (100~200)	2	22	305	340	325	130.8	148	185	176	164	11	17.65	47	12	130	3	120	22	40	7	25	35
	100~200	3	28	315	350	335	155.6	170	220	216	216	11	24.22	60	15	130	6	120	28	45	7	31	40
400W (1/2 HP) Standard for 3-phase	3~10 (12.5~90)	2	22	325	340	-	130.8	148	185	176	164	11	17.65	50	12	130	3	135	22	40	7	25	35
	12.5~90 (100~200)	3	28	335	350	-	155.6	170	220	216	216	11	24.22	60	15	130	6	135	28	45	7	31	40
	100~200	4	32	400	410	-	180.3	185	255	241	225	13	30.22	65	15	130	4	135	32	55	10	35	50
400W (1/2 HP) Standard for 1-phase	3~10 (12.5~90)	2	22	340	350	370	130.8	148	185	176	164	11	17.65	50	12	162	3	135	22	40	7	25	35
	12.5~90 (100~200)	3	28	360	370	380	155.6	170	220	216	216	11	24.22	60	15	162	6	135	28	45	7	31	40
	100~200	4	32	400	410	450	180.3	185	255	241	225	13	30.22	65	15	162	4	135	32	55	10	35	50
750W (1 HP)	(3~25)	2	22	345	355	400	130.8	148	185	176	164	11	17.65	47	12	162	3	135	22	40	7	25	35
	3~25 (30~120)	3	28	360	370	410	155.6	170	220	216	216	11	24.22	60	15	162	6	135	28	45	7	31	40
	30~120 (125~200)	4	32	400	410	450	180.3	185	255	241	225	13	30.22	65	15	162	4	135	32	55	10	35	50
	125~200	5	40	465	465	500	219.3	230	310	291	272	15	36	85	21	162	5	135	40	65	10	43	60
1500W (2 HP)	(3~30)	3	28	420	430	-	155.6	170	220	216	216	11	24.22	60	15	192	6	135	28	45	7	31	40
	3~30 (40~100)	4	32	460	465	450	180.3	185	255	241	225	13	30.22	65	15	192	4	146	32	55	10	35	50
	40~100 (110~150)	5	40	510	510	510	219.3	230	310	291	272	15	36	85	21	192	5	146	40	65	10	43	60
	110~180	6	50	560	560	560	275.8	280	390	369	341	18	51	92	25	192	5	146	50	80	14	54	75
2200W (3 HP)	3~40 (45~80)	5	40	530	530	-	219.3	230	310	291	272	15	36	85	21	220	5	160	40	65	10	43	60
	45~100	6	50	580	580	-	275.8	280	390	369	341	18	51	92	25	220	5	160	50	80	14	54	75
3700W (5 HP)	3~10 (15~60)	5	40	560	560	-	219.3	230	310	291	272	15	36	85	21	220	5	160	40	65	10	43	60
	15~60	6	50	620	620	-	275.8	280	390	369	341	18	51	92	25	220	5	160	50	80	14	54	75

* Code 18：Belongs to B type flange.
※ Ratio showed in parenthesis ( ) are used for light loading.
NOTES/ (1) A：With 3-phase motors. / A1:With 3-phase brake motors. / A2: With single-phase motors.
(2) Refer to dimension of single-phase brake motor, please contact us.

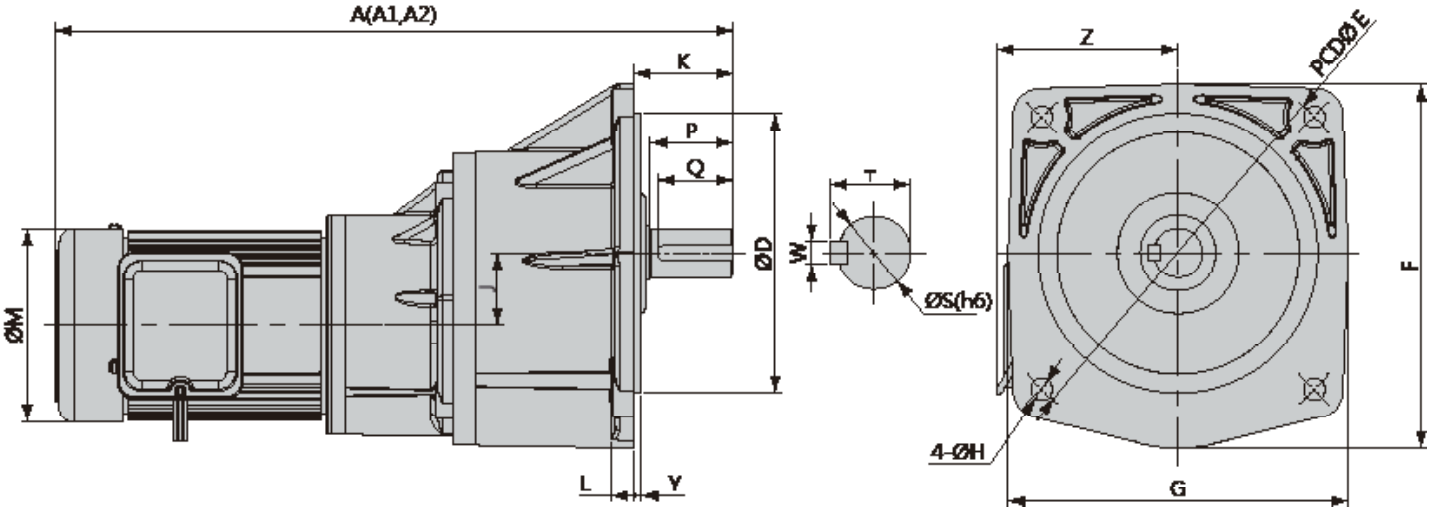

Dimension (mm)

Output W(HP)	Ratio	Housing	Code	A	A1	A2	D	E	F	G	H	J	K	L	M	Y	Z	Output Shaft				
																		S	P	W	T	Q
100W	(250~1800)	1#+2#	22	350	385	350	148	185	176	164	11	33.65	50	12	130	3	135	22	40	7	25	35
	250~1800	1#+3#	28	350	385	350	170	220	216	216	11	40.22	60	15	130	6	135	28	45	7	31	40
200W	(250~1800)	1#+3#	28	385	420	405	170	220	216	216	11	40.22	60	15	130	6	135	28	45	7	31	40
	250~1800	2#+4#	32	435	470	455	185	255	241	225	13	47.87	65	15	130	4	135	32	55	10	35	50
400W (Standard for 3-phase)	(250~1800)	2#+4#	32	455	470	500	185	255	241	225	13	47.87	65	15	130	4	135	32	55	10	35	50
	250~1800	3#+5#	40	510	525	555	230	310	291	272	15	52.22	85	21	130	5	135	40	65	10	43	60
400W (Standard for 1-phase)	(250~1800)	2#+4#	32	455	470	500	185	255	241	225	13	47.87	65	15	162	4	135	32	55	10	35	50
	250~1800	3#+5#	40	510	525	555	230	310	291	272	15	52.22	85	21	162	5	135	40	65	10	43	60

※ Ratio showed in parenthesis ( ) are used for light loading.
NOTES/ (1) A : With 3-phase motors. / A1:With 3-phase brake motors. / A2: With single-phase motors.
(2) Refer to dimension of single-phase brake motor, please contact us.

Specification

Specification of Motor and Brake

Phase	Output (W/HP)	Pole	Voltage	Hz	Rating			Class	Kgfm	釋放時間		調整間隙		附安全剎車器		
					RPM	Current (AMP)	Torque (Kg-m)			AC Switch	DC Switch	Specified Value	Boundary Value	Brake Voltage	Input Voltage	Operation Times
Three Phase 3Ø	100W(1/8 HP)	4P	220/380	60/50	1680/1380	0.8/0.46	0.057/0.07	F	0.1	0.1	0.06	0.3	0.7	DC90V	AC 200-240V	10times /min
	200W(1/4 HP)		220/380	60/50	1680/1380	1.2/0.7	0.116/0.142	F	0.2	0.07	0.03	0.3	0.7			
	400W(1/2 HP)		220/380	60/50	1680/1400	2.1/1.2	0.231/0.277	F	0.4	0.10	0.03	0.3	0.7			
	750W(1 HP)		220/380	60/50	1680/1400	3.6/2.1	0.43/0.52	F	0.8	0.12	0.05	0.4	1.0			
	1500W(2 HP)		220/380	60/50	1680/1420	6.1/3.5	0.87/1.03	F	1.6	0.14	0.05	0.4	1.0			
	2200W(3 HP)		220/380	60/50	1680/1420	9.5/5.5	1.26/1.50	F	2.5	0.15	0.03	0.4	1.0			
	3700W(5 HP)		220/380	60/50	1680/1420	15/8.7	2.14/2.54	F	5.0	0.17	0.05	0.5	1.2			
Single Phase 1Ø	100W(1/8 HP)	4P	110/220	60/50	1680/1380	2/1	0.057/0.07	F	0.1	0.1	0.06	0.3	0.7	DC90V	AC 100-110V 200-240V	10times /min
	200W(1/4 HP)		110/220	60/50	1680/1380	4/2	0.116/0.142	F	0.2	0.07	0.03	0.3	0.7			
	400W(1/2 HP)		110/220	60/50	1680/1400	8/4	0.232/0.278	F	0.4	0.10	0.03	0.3	0.7			
	750W(1 HP)		110/220	60/50	1680/1400	12/6	0.43/0.52	F	0.8	0.12	0.15	0.4	1.0			

Output Specification of Reducer

Ratio	Output RPM		100W (1/8 HP) Output shaft permissible torque				200W (1/4 HP) Output shaft permissible torque				400W (1/2 HP) Output shaft permissible torque				750W (1 HP) Output shaft permissible torque				1500W (2 HP) Output shaft permissible torque				2200W (3 HP) Output shaft permissible torque			
	50Hz	60Hz		50Hz Kg.m	60Hz Kg.m	O.H.L Kgf		50Hz Kg.m	60Hz Kg.m	O.H.L Kgf		50Hz Kg.m	60Hz Kg.m	O.H.L Kgf		50Hz Kg.m	60Hz Kg.m	O.H.L Kgf		50Hz Kg.m	60Hz Kg.m	O.H.L Kgf		50Hz Kg.m	60Hz Kg.m	O.H.L Kgf
3	500	600	18	0.2	0.17	30	18	0.38	0.31	30	22	0.71	0.6	54	28	1.29	1.11	62	32	2.60	2.21	135	40	3.8	3.19	155
5	300	360		0.32	0.27	60		0.61	0.5	60		1.15	1	90		2.25	1.85	130		4.81	3.5	180		6.55	5.48	220
10	150	180		0.62	0.51	90		1.2	1	90		2.5	2.1	120		4.6	3.9	180		8.8	7.1	250		13.2	10.7	320
12.5	120	144		0.77	0.66	100	22	1.54	1.24	100	28	3.1	2.5	130		5.7	4.9	190		11	8.9	290		16.5	13.3	340
15	100	120		0.93	0.77	100		1.85	1.5	100		3.7	2.9	140		6.9	5.8	220		13.2	10.7	290		19.8	16	360
20	75	90		1.2	1	120		2.47	1.99	120		4.94	4	150		9.3	7.7	240		17.6	14.2	330		26.5	21.4	410
25	60	72		1.5	1.3	130		3	2.49	130		6.17	4.9	170		11.6	9.6	250		22.1	17.8	390		33.1	26.7	480
30	50	60		1.8	1.4	140		3.6	2.98	180		7.4	5.87	260	32	13.85	11.55	410		26.4	21.3	520		39.65	32	710
40	37.5	45		2.4	2	150		4.94	3.99	190		9.88	7.98	290		17.9	14.9	430	40	35.3	28.5	600		53	42.8	740
50	30	36		3	2.5	160		6.17	4.98	200		12.3	9.97	320		22.4	18.7	470		44.2	35.7	720	50	66.3	53.3	880
60	25	30	22	3.6	3	220		7.4	5.98	220		14.8	11.9	350		26.9	22.4	560		53	42.8	720		79.5	64.2	1000
70	22	26		4.3	3.6	220		7.9	6.9	220		16.5	13.6	350		31.7	26.5	560		62.6	52.1	720		92.6	77.3	1000
75	20	24		4.6	3.7	220		9.2	7.5	220		18.5	14.9	350		35.1	28.3	560		66.3	53.5	720		99.4	80.3	1000
80	18.7	22.5		4.9	4.1	220		9.4	7.9	220		18.4	15.5	350		35.4	29.8	560		70.9	59.5	720		105.1	87.7	1000
90	16.6	20		5.4	4.4	250		11	8.9	250		22.1	17.8	350		42	33.95	600		79.4	64.1	720				
100	15	18		6	5	250	28	12.3	9.9	250	32	24.7	19.9	350		46.8	37.8	600		88.4	71.4	720				
120	12.5	15		7.2	6	250		14.8	11.9	340		29.6	23.9	600		58.4	47.3	720	50	106	85.6	1000				
150	10	12		9.1	7.4	250		18.4	14.8	350		36.9	29.8	600	40	70.1	56.6	720		132.5	107	1000				
180	8.3	10		11	9	250		22.2	17.9	350		44.4	35.9	600		84.2	68	720		132.6	107.1	1000				
200	7.5	9		11.9	10	250		24.7	19.9	350		49.4	39.9	600		93.6	75.6	720								

※ Above data is for reference only. Any changes will not be noticed.

LHM Flange Type Gear Reducer

Model of Flange Type Reducer

LHM 18 – 100 – 20

Model	Code	Output	Ratio
LHM : Horizontal flange type gear reducer.	Ø18:18 Ø22:22 Ø28:28 Ø32:32 Ø40:40	100:100W 200:200W 400:400W 750:750W 1500:1500W 2200:2200W 3700:3700W	3~200

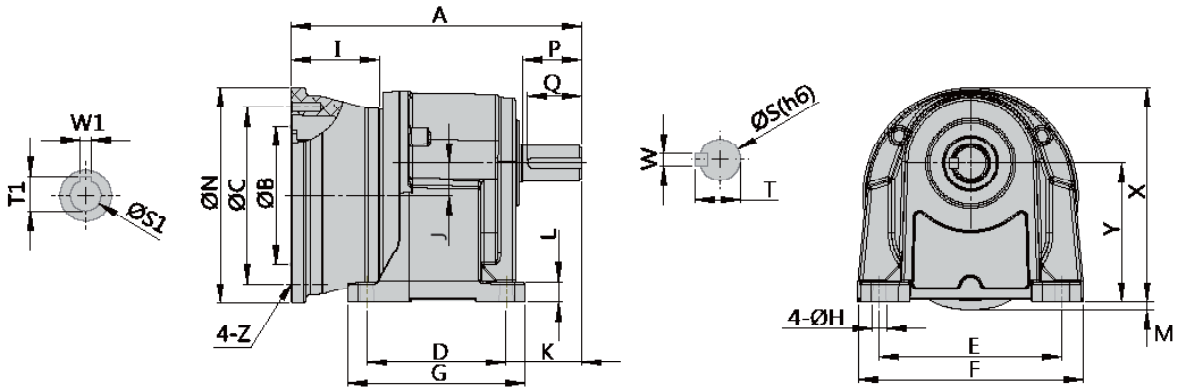

Dimension (mm)

Output W (HP)	Ratio	Code	A	B	C	D	E	F	G	H	I	J	K	L	M	N	X	Y	Z	Output Shaft					Input Bore		
																				Output		Keyway			Bore	Keyway	
																				S	P	W	T	Q	S1	W1	T1
100W 1/8HP	3-50 (60~200)	18	160	110	130	40	110	135	65	9	55	16	50	10.5	8	160	131	88.5	M8	Ø18	30	5	20	25	Ø11	4	12.8
	60-200	22	190	110	130	65	130	158	90	11	55	17.65	60	13	1	160	153	97.5	M8	Ø22	40	7	25	35	Ø11	4	12.8
200W 1/4HP	3-10 (12.5~90)	18	160	110	130	40	110	135	65	9	55	16	50	10.5	8	160	131	88.5	M8	Ø18	30	5	20	25	Ø11	4	12.8
	12.5-90 (100~200)	22	190	110	130	65	130	158	90	11	55	17.65	60	13	1	160	153	97.5	M8	Ø22	40	7	25	35	Ø11	4	12.8
	100-200	28	205	110	130	90	140	180	120	11	55	24.22	66.5	16	-	160	178	116	M8	Ø28	45	7	31	40	Ø11	4	12.8
400W 1/2HP	3-10 (12.5~90)	22	190	110	130	65	130	158	90	11	55	17.65	60	13	1	160	153	97.5	M8	Ø22	40	7	25	35	Ø14	5	16.3
	12.5-90 (100~200)	28	205	110	130	90	140	180	120	11	55	24.22	66.5	16	-	160	178	116	M8	Ø28	45	7	31	40	Ø14	5	16.3
	100-200	32	255	110	130	130	170	210	165	13	55	30.22	70	20	-	160	216	130	M8	Ø32	55	10	35	50	Ø14	5	16.3
750W 1HP	3-25 (30~120)	28	235	130	165	90	140	180	120	11	82	24.22	66.5	16	9	200	178	116	M10	Ø28	45	7	31	40	Ø19	6	21.8
	30-120 (125~200)	32	280	130	165	130	170	210	165	13	82	30.22	70	20	1	200	216	130	M10	Ø32	55	10	35	50	Ø19	6	21.8
	125-200	40	330	130	165	150	210	265	205	15	82	36	85	23	-	200	250	160	M10	Ø40	65	10	43	60	Ø19	6	21.8
1500W 2HP	3-30	32	280	130	165	130	170	210	165	13	82	30.22	70	20	1	200	216	130	M10	Ø32	55	10	35	50	Ø24	8	27.3
	40-100	40	330	130	165	150	210	265	205	15	82	36	85	23	-	200	250	160	M10	Ø40	65	10	43	60	Ø24	8	27.3
2200W 3HP	3-40	40	350	180	215	150	210	265	205	15	95	36	85	23	-	250	250	160	M14	Ø40	65	10	43	60	Ø28	8	31.3
3700W 5HP	3-10	40	350	180	215	150	210	265	205	15	95	36	85	23	-	250	250	160	M14	Ø40	65	10	43	60	Ø28	8	31.3

※ Ratio showed in parenthesis ( ) are used for light loading.

Note : Available for IEC motors.

LVM Flange Type Gear Reducer

Model of Flange Type Reducer

LVM 18 – 100 – 20

Model	Code	Output	Ratio
LVM : Vertical flange type gear reducer.	Ø18:18 Ø22:22 Ø28:28 Ø32:32 Ø40:40	100:100W 200:200W 400:400W 750:750W 1500:1500W 2200:2200W 3700:3700W	3~200

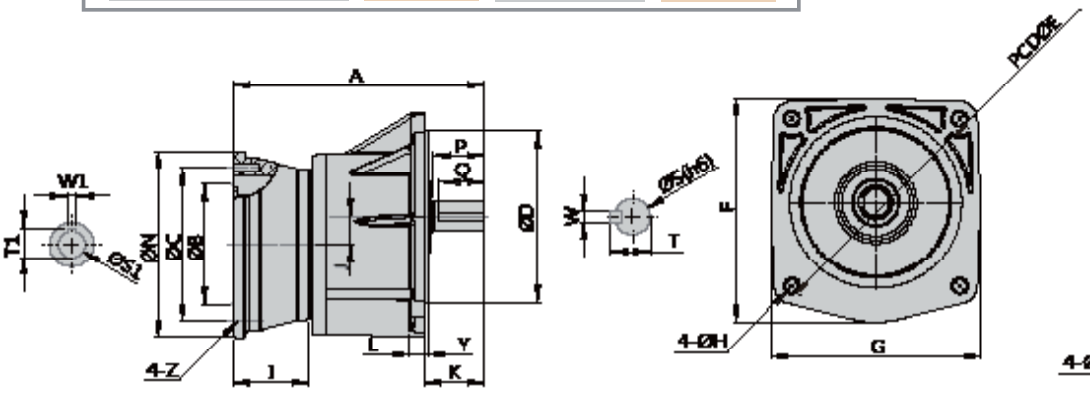

A Type Flange
(For Code 22、28、32、40)

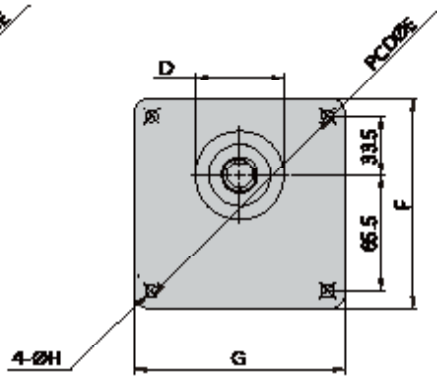

* B Type Flange
(For Code 18)

Dimension (mm)

Output W (HP)	Ratio	Code	A	B	C	D	E	F	G	H	I	J	K	L	N	Y	Z	Output Shaft					Input Bore		
																		Shaft		Keyway			Bore	Keyway	
																		S	P	W	T	Q	S1	W1	T1
100W 1/8HP	3-50 (60~200)	18*	160	110	130	50	140	119	119	9	55	16	40	12	160	-	M8	Ø18	30	5	20	25	Ø11	4	12.8
	60-200	22	190	110	130	148	185	176	164	11	55	17.65	47	12	160	3	M8	Ø22	40	7	25	35	Ø11	4	12.8
200W 1/4HP	3-10 (12.5~90)	18*	160	110	130	50	140	119	119	9	55	16	40	12	160	-	M8	Ø18	30	5	20	25	Ø11	4	12.8
	12.5-90 (100~200)	22	190	110	130	148	185	176	164	11	55	17.65	47	12	160	3	M8	Ø22	40	7	25	35	Ø11	4	12.8
	100-200	28	205	110	130	170	220	216	216	11	55	24.22	60	15	160	6	M8	Ø28	45	7	31	40	Ø11	4	12.8
400W 1/2HP	3-10 (12.5~90)	22	190	110	130	148	185	176	164	11	55	17.65	47	12	160	3	M8	Ø22	40	7	25	35	Ø14	5	16.3
	12.5-90 (100~200)	28	205	110	130	170	220	216	216	11	55	24.22	60	15	160	6	M8	Ø28	45	7	31	40	Ø14	5	16.3
	100-200	32	255	110	130	185	255	241	225	13	55	30.22	70	15	160	4	M8	Ø32	55	10	35	50	Ø14	5	16.3
750W 1HP	3-25 (30~120)	28	235	130	165	170	220	216	216	11	82	24.22	60	15	200	6	M10	Ø28	45	7	31	40	Ø19	6	21.8
	30-120 (125~200)	32	280	130	165	185	255	241	225	13	82	30.22	70	15	200	4	M10	Ø32	55	10	35	50	Ø19	6	21.8
	125-200	40	330	130	165	230	310	290	268	15	82	36	85	21	200	5	M10	Ø40	65	10	43	60	Ø19	6	21.8
1500W 2HP	3-30	32	280	130	165	185	255	241	225	13	82	30.22	70	15	200	4	M10	Ø32	55	10	35	50	Ø24	8	27.3
	40-100	40	330	130	165	230	310	290	268	15	82	36	85	21	200	5	M10	Ø40	65	10	43	60	Ø24	8	27.3
2200W 3HP	3-40	40	350	180	215	230	310	290	268	15	95	36	85	21	250	5	M14	Ø40	65	10	43	60	Ø28	8	31.3
3700W 5HP	3-10	40	350	180	215	230	310	290	268	15	95	36	85	21	250	5	M14	Ø40	65	10	43	60	Ø28	8	31.3

※ Ratio showed in parenthesis ( ) are used for light loading.
* Code 18 : Belongs to B type flange. Note : Available for IEC motors.

LHD Double Shaft Type Gear Reducer

Model of Double Shaft Type Reducer

LHD 18 – 100 – 20

Model	Code	Output	Ratio
LHD : Horizontal double shaft type gear reducer.	Ø18:18 Ø22:22 Ø28:28 Ø32:32	100:100W 200:200W 400:400W 750:750W 1500:1500W	3~200

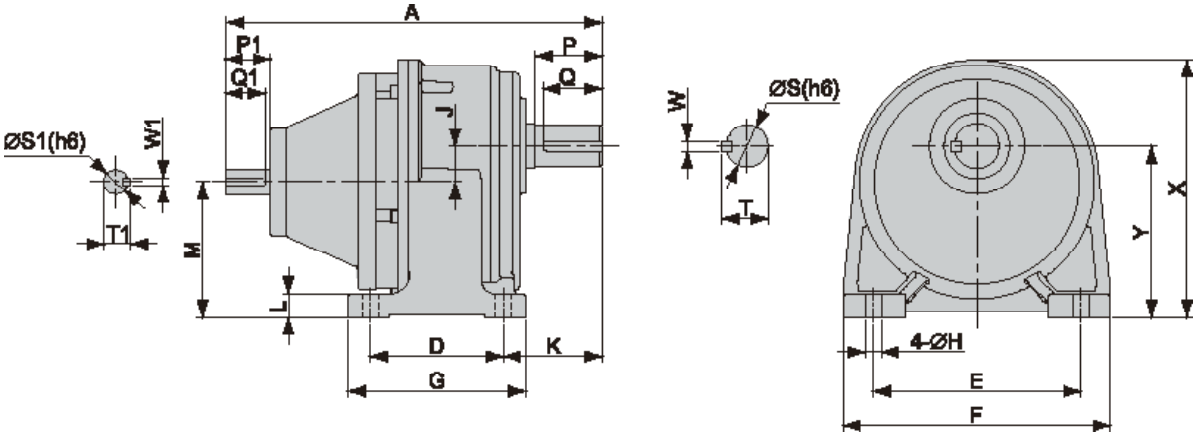

Dimension (mm)

Output W (HP)	Ratio	Code	A	D	E	F	G	H	J	K	L	M	X	Y	Output Shaft					Input Shaft				
															S	P	W	T	Q	S1	P1	W1	T1	Q1
100W 1/8HP	3-50 (60~200)	18	164.5	40	110	135	65	9	16	45	10	72.5	131	88.5	18	30	5	20	25	14	25	5	16	22
	60-200	22	195.5	65	130	158	90	11	17.65	60	13	80	153	97.5	22	40	7	25	35	14	25	5	16	22
200W 1/4HP	3-10 (12.5~90)	18	164.5	40	110	135	65	9	16	45	10	72.5	131	88.5	18	30	5	20	25	14	25	5	16	22
	12.5-90 (100~200)	22	195.5	65	130	158	90	11	17.65	60	13	80	153	97.5	22	40	7	25	35	14	25	5	16	22
	100-200	28	210	90	140	180	120	11	24.22	66.5	16	92	174	116	28	45	7	31	40	14	25	5	16	22
400W 1/2HP	3-10 (12.5~90)	22	230	65	130	158	90	11	17.65	60	13	80	153	97.5	22	40	7	25	35	16	30	5	18	27
	12.5-90 (100~200)	28	254	90	140	180	120	11	24.22	66.5	16	92	174	116	28	45	7	31	40	16	30	5	18	27
	100-200	32	293	130	170	210	165	13	30.22	70	20	100	198	130	32	55	10	35	50	16	30	5	18	27
750W 1HP	3-25 (30~120)	28	267	90	140	180	120	11	24.22	66.5	16	92	174	116	28	45	7	31	40	19	40	6	21.5	35
	30-120 (125~200)	32	303	130	170	210	165	13	30.22	70	20	100	198	130	32	55	10	35	50	19	40	6	21.5	35
1500W 2HP	3-30	32	313	130	170	210	165	13	30.22	70	20	100	198	130	32	55	10	35	50	24	50	8	27	45

※ Ratio showed in parenthesis ( ) are used for light loading.

LVD Double Shaft Type Gear Reducer

Model of Double Shaft Type Reducer

LVD 18 – 100 – 20

Model	Code	Output	Ratio
LVD : Vertical double shaft type gear reducer.	Ø18:18 Ø22:22 Ø28:28 Ø32:32	100:100W 200:200W 400:400W 750:750W 1500:1500W	3~200

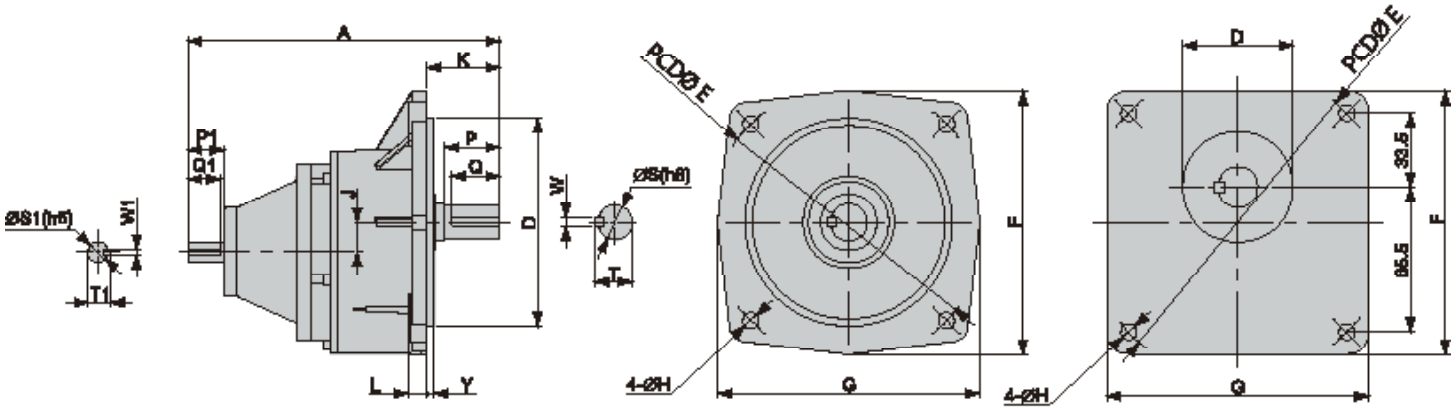

A Type Flange
(For Code 22、28、32)

* B Type Flange
(For Code 18)

Dimension (mm)

Output W (HP)	Ratio	Code	A	D	E	F	G	H	J	K	L	Y	Output Shaft					Input Shaft				
													S	P	W	T	Q	S1	P1	W1	T1	Q1
100W 1/8HP	3-50 (60~200)	18*	164.5	50	140	119	119	9	16	40	12	_	18	30	5	20	25	14	25	5	16	22
	60-200	22	195.5	148	185	176	164	11	17.65	47	12	3	22	40	7	25	35	14	25	5	16	22
200W 1/4HP	3-10 (12.5~90)	18*	164.5	50	140	119	119	9	16	40	12	_	18	30	5	20	25	14	25	5	16	22
	12.5-90 (100~200)	22	195.5	148	185	176	164	11	17.65	47	12	3	22	40	7	25	35	14	25	5	16	22
	100-200	28	210	170	220	216	216	11	24.22	60	15	6	28	45	7	31	40	14	25	5	16	22
400W 1/2HP	3-10 (12.5~90)	22	230	148	185	176	164	11	17.65	47	12	3	22	40	7	25	35	16	30	5	18	27
	12.5-90 (100~200)	28	254	170	220	216	216	11	24.22	60	15	6	28	45	7	31	40	16	30	5	18	27
	100-200	32	293	185	255	241	225	13	30.22	65	15	4	32	55	10	35	50	16	30	5	18	27
750W 1HP	3-25 (30~120)	28	267	170	220	216	216	11	24.22	60	15	6	28	45	7	31	40	19	40	6	21.5	35
	30-120 (125~200)	32	303	185	255	241	225	13	30.22	65	15	4	32	55	10	35	50	19	40	6	21.5	35
1500W 2HP	3~30	32	313	185	255	241	225	13	30.22	65	15	4	32	55	10	35	50	24	50	8	27	45

※ Ratio showed in parenthesis ( ) are used for light loading.
* Code 18 : Belongs to B type flange.