SC65F

Specifications 1/4

Incremental Type (Solid shaft)

- Feature: sturdy and durable,optional various output mode,long service life,etc
- Application: numerical control machine,textile industry,packing machinery,etc,for automation control
- External dimensions: external diameter Ø65mm (flange 68*68),thickness58mm,
  diameter of shaft 15mm(key way 5mm)
- Resolution: up to 23040P/R
- Supply voltage: DC5V; DC8-30V
- Protection: IP50; IP65
- Cable length: 1000mm
- Weight: about 590g

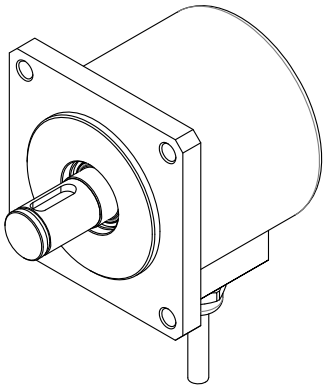

SC65F-T

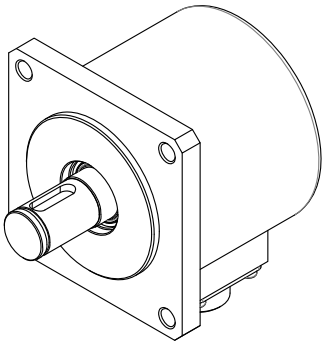

SC65F-C

Model Guide

- Model form (filled required parameters in the box as following)
- Must choose supply voltage: DC5V; DC8-30V

SC65– **C** **6** **C** **2048** **[ ]**

Product model series	T=Radial cable C=Radial socket	Output phase 1=A 2=A+B 3=A+B+Z 4=A+$\bar{A}$+B+$\bar{B}$ 6=A+$\bar{A}$+B+$\bar{B}$+Z+$\bar{Z}$	Output type N=OC V=Voltage F=Push-pull C=TTL(DC5V) E=HTL(DC8-30V)	Pulse per revolution (P/R) 50; 60; 100; 200; 250; 256; 300; 360; 450; 500; 512; 600; 720; 800; 900; 1000; 1024; 1200; 1250; 1440; 2000; 2048; 2500; 2880; 3000; 3600; 4096; 5000; 5760; 8192; 10000; 11520; 16384; 20000; 23040	Special requirement Blank=cable length 1m; IP50 Special cable length =C+number Special protection IP65=D

Output Mode

Output type	Output circuit	Output wave form	Connection
OC	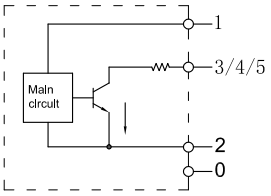	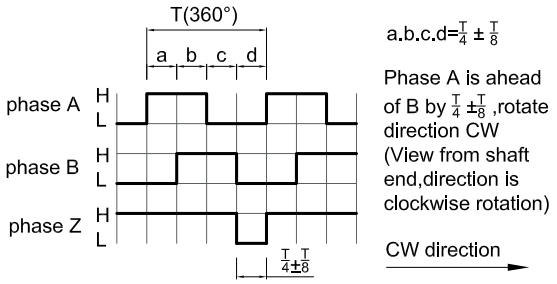	0=GND 1=red=DC5V; DC8-30V 2=black=OV 3=white=A 4=green=B 5=yellow=Z
Push-Pull	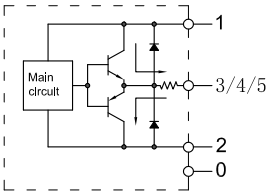		
Voltage	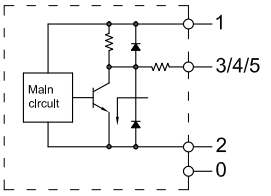	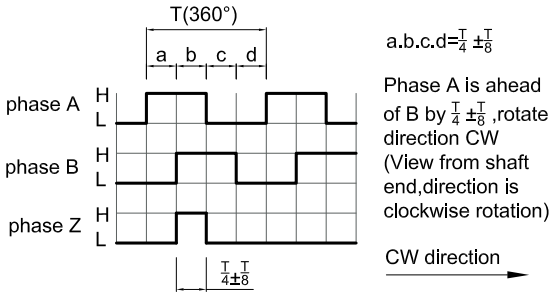	
TTL HTL	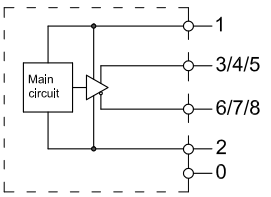	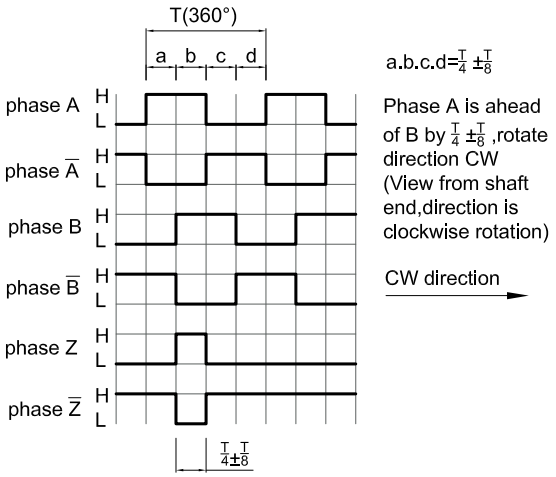	0=shielding=GND 1=red=DC5V; DC8-30V 2=black=OV 3=white=A 4=green=B 5=yellow=Z 6=white/black=Ā 7=green/black=B̄ 8=yellow/black=Z̄

Electrical Characteristics

Parameter / Output type / Item			OC	Voltage	Push-pull	TTL	HTL
Supply voltage			DC+5V±5%; DC8V-30V±5%			DC+5V±5%	DC8-30V±5%
Consumption current			100mA Max				
Allowable ripple			≤3%rms				
Top response frequency			100KHz			200KHz	300KHz
Output volume	Output current	Input	≤30mA	Load resistance 2.2K	≤30mA	≤±20mA	≤±50mA
		Output	—		≤10mA		
	Output voltage	"H"	—	—	≥[(Supply voltage)-2.5V]	≥2.5V	≥Vcc-3 VDC
		"L"	≤0.4V	≤0.7V(less than 20mA)	≤0.4V(30mA)	≤0.5V	≤ 1V VDC
	Load voltage		≤DC30V	—		—	
Rise & Fall time			Less than 2us(cable length：2m)			Less than 1us (Cable length：2m)	≤100ns
Insulation strength			AC500V 60s				
Insulation resistance			10MΩ				
Mark to space ratio			45% to 55%				
Phase shift between A & B			90°±10° (low speed,frequency ≤1000Hz)				
			90°±20° (high speed,frequency >1000Hz)				
Origin motion			Low level available	High level available	Low level available	—	
GND			not connect to encoder				

Mechanical Characteristics

Shaft	Ø15mm (key way 5mm)
Starting torque	Less than 10mN·m
Inertia moment	Less than 3×10^{-6} kg·m²
Shaft load	Radial 30N; Axial 20N
Slew speed	≤5000 rpm; IP65≤3000 rpm
Bearing Life	$1.5X10^{9}$ revs at rated load(100000hrs at 2500RPM)
Shell	Die cast aluminum
Weight	about 590g

Environmental Specifications

Environmental temperature	Operating:—20～+80°C(repeatable winding cable: -10°C); Storage:—25～+85°C
Environmental humidity	Operating and storage: 35～85％RH(noncondensing)
Vibration(endure)	Amplitude 0.75mm,5~55Hz,2h for X,Y,Z direction individually
Shock(endure)	490m/s² 11ms three times for X,Y,Z direction individually
Protection	IP50; IP65

We reserve the final interpretation right of this specifications , subject to change without notice .

Basic Dimensions

- SC65-C

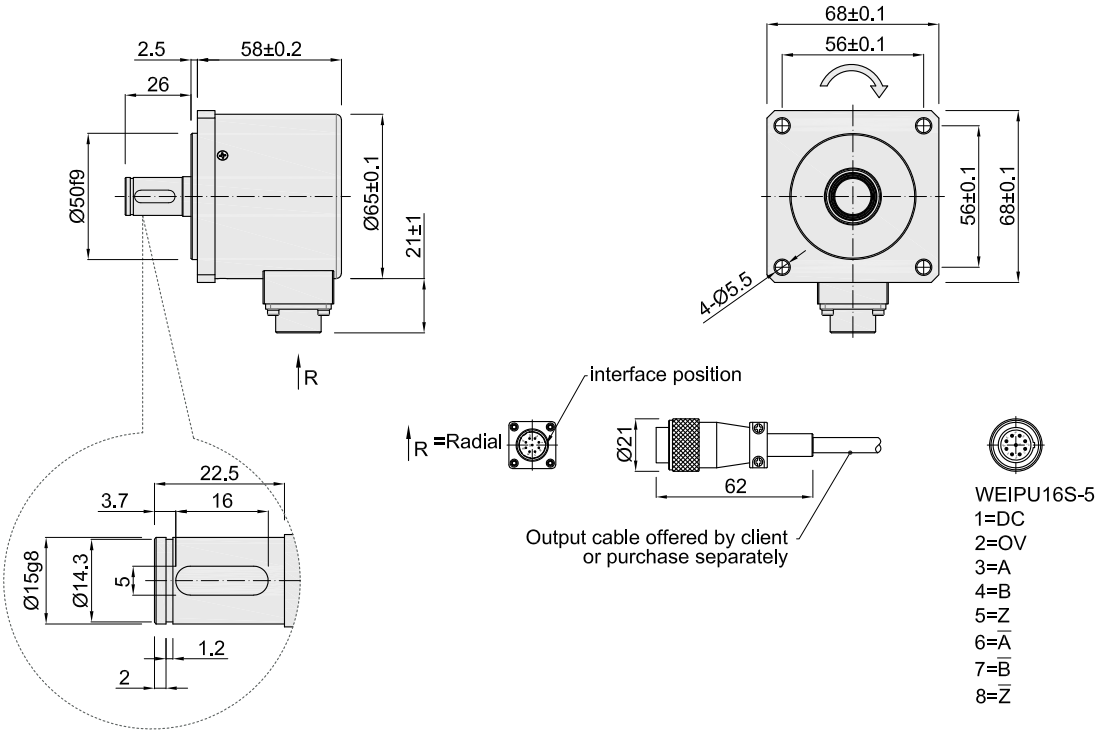

- SC65-T

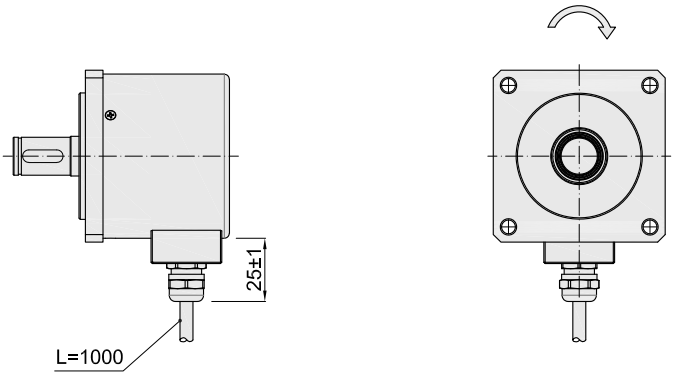

Assembling requirement

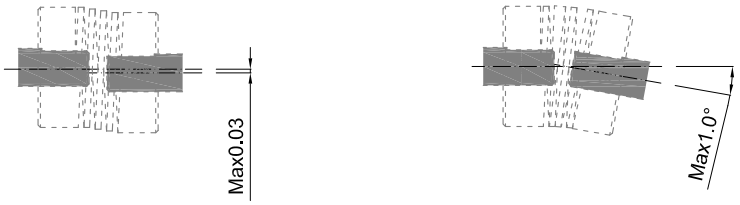

Notice : coaxiality between shaft of encoder and power shaft must be less than 0.03mm, and gradient must be less than 1.0°.

Unit: mm

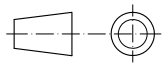

= Rotate direction of signal output shaft

About vibration

Vibration act on encoder always cause wrong pulse , so we should pay attention to working place.
More pulse per revolution , narrower groovy spacing of grating , more effect to encoder by vibration,when rev is low or stop , vibration act on shaft or main body would cause grating vibrating , so encoder might make wrong pulse。